SVG SUPER VERSATILE GAS BURNER

SVG SERIES BURNERS

	TILE DESIGNATION							
	HR	HS	HT	HC	HA	MR	MS	MA
	High Velocity Round	High Velocity Square	High Velocity Hauck Tail	High Velocity Ceramic	High Velocity Alloy	Medium Velocity Round	Medium Velocity Square	Medium Velocity Alloy
BURNER MODEL	**BURNER NOMINAL CAPACITY (10^3 Btu/hr) RATINGS**							
SVG 110 / 210	110	110	Not Available	110	95	120	120	120
SVG 112 / 212	250	250	Not Available	250	240	275	275	260
SVG 115 / 215	410	410	Not Available	410	385	415	415	410
SVG 120 / 220	700	700	700	700	735	750	750	735
SVG 125 / 225	1,000	1,000	1,000	1,000	1,000	1,200	1,200	1,240
SVG 130 / 230	1,300	1,300	1,300	1,300	1,250	1,500	1,500	1,510
SVG 135 / 235	1,610	1,610	1,610	Not Available	Not Available	Not Available	Not Available	Not Available
SVG 140 / 240	2,100	2,100	2,100	2,100	2,005	2,350	2,350	2,320
SVG 160 / 260	4,700	Not Available	Not Available	4,700	4,295	5,520	Not Available	4,980
SVG 180 / 280	8,515	Not Available	Not Available	Not Available	8,515	9,000	Not Available	9,624

NOTES:

1. Capacities based on natural gas with HHV of 1034 Btu/ft^3, 0.59 S.G., and an stoichiometric air:gas ratio of 9.74:1 with burner firing into chamber under no pressure @ 10% excess air. For **CP** model capacities, refer to data as listed under the appropriate HR, HS, MR or MS tile designations.
2. Air and gas flows based on 60°F @ sea level.
3. Static air pressure measured at the burner air inlet pressure tap.
4. All data based on industry standard air and gas piping practices.
5. Flame detection available via UV scanner or flame rod.
6. Burners operating above the rated capacity; consult Hauck.
7. See individual burner sheets for detailed capacity ratings and operational data, SVG-4.

(See Reverse Side for Metric Capacities)

In accordance with Hauck's commitment to Total Quality Improvement, Hauck reserves the right to change the specifications of products without prior notice.

SVG SUPER VERSATILE GAS BURNER
SVG-E SERIES BURNERS

	TILE DESIGNATION							
	HR	**HS**	**HT**	**HC**	**HA**	**MR**	**MS**	**MA**
	High Velocity Round	High Velocity Square	High Velocity Hauck Tail	High Velocity Ceramic	High Velocity Alloy	Medium Velocity Round	Medium Velocity Square	Medium Velocity Alloy
BURNER MODEL	**BURNER NOMINAL CAPACITY (kW) RATINGS**							
SVG-E10	29.1	29.1	Not Available	29.1	24.8	31.7	31.7	31.7
SVG-E12	66.1	66.1	Not Available	66.1	69.5	72.7	72.7	69.2
SVG-E15	108	108	Not Available	108	116	110	110	108
SVG-E20	185	185	185	185	195	198	198	194
SVG-E25	265	265	265	265	265	317	317	328
SVG-E30	343	343	343	343	330	395	395	400
SVG-E35	425	425	425	Not Available	Not Available	Not Available	Not Available	Not Available
SVG-E40	554	554	554	554	529	620	620	612
SVG-E60	1,241	Not Available	Not Available	1,241	1,134	1,457	Not Available	1,315
SVG-E80	2,250	Not Available	Not Available	Not Available	2,250	2,376	Not Available	2,541

NOTES:

1. Capacities based on natural gas with LHV of 36.74 MJ/nm^3, 0.59 S.G., and an stoichiometric air:gas ratio of 9.74:1 with burner firing into chamber under no pressure @ 10% excess air. For **CP** model capacities, refer to data as listed under the appropriate HR, HS, MR or MS tile designation.
2. Air and gas flows based on 0°C @ sea level.
3. Static air pressure measured at the burner air inlet pressure tap.
4. All data based on industry standard air and gas piping practices.
5. Flame detection available via UV scanner or flame rod.
6. Burners operating above the rated capacity; consult Hauck.
7. See individual burner sheets for detailed capacity ratings and operational data, SVG-4.

In accordance with Hauck's commitment to Total Quality Improvement, Hauck reserves the right to change the specifications of products without prior notice.

SVG SUPER VERSATILE GAS BURNER

HIGH VELOCITY ROUND TILE
SVG _10C-HR – SVG _80C-HR

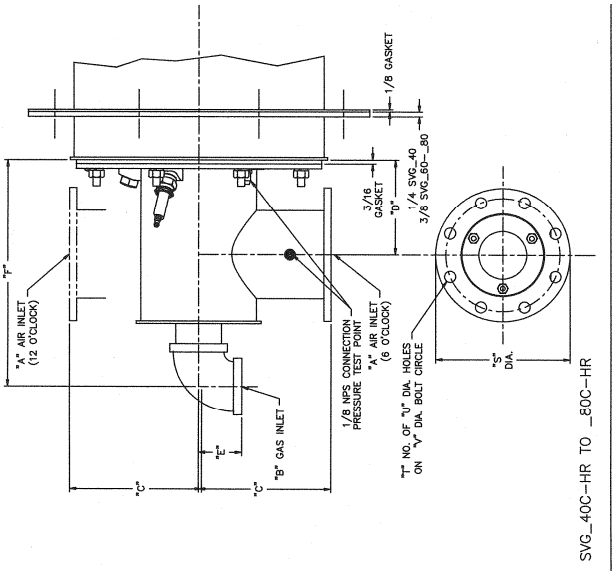

SVG_40C–HR TO _80C–HR

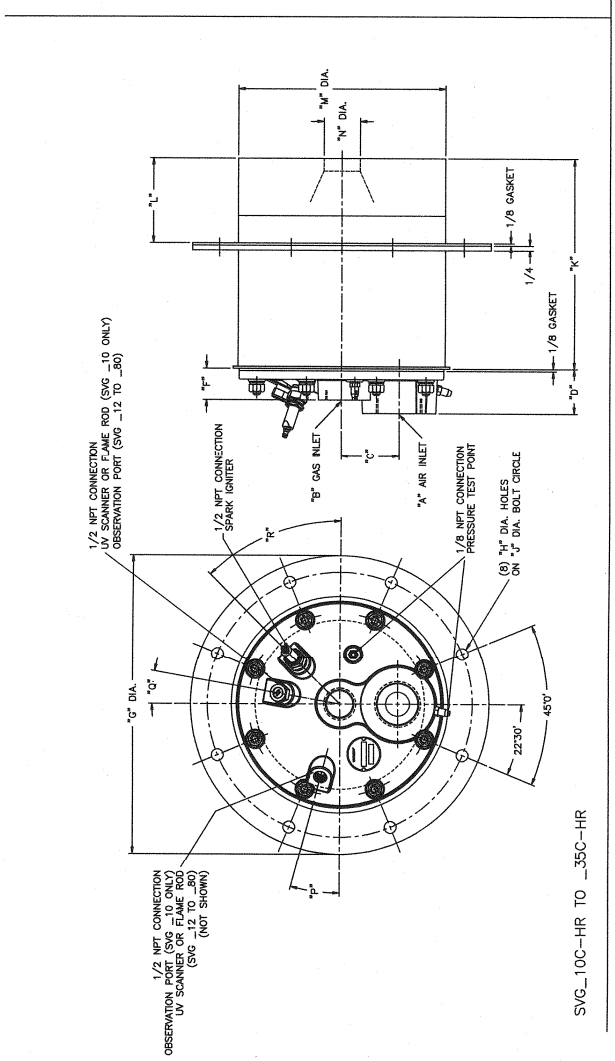

SVG_10C–HR TO _35C–HR

MODEL NO.	A	B	C	D	E	F	G	H	J	K	L	M	N	P	Q	R	S	T	U	V	APPROX. NET WT.
SVG_10C–HR	1 NPT	3/4 NPT	1 5/8	1 23/32		15/16	9 1/2	1/2	8	8 3/4	3 – 8	6 1/4	13/16	10° 0'	20° 0'	30° 0'					28 LB
SVG_12C–HR	1 1/4 NPT	1 NPT	2			1 23/32	12		10 1/2	9 3/32	3 – 8	7 3/8	1 1/8								43 LB
SVG_15C–HR	1 1/2 NPT									12 7/16	3 – 11 1/2		1 7/16								54 LB
SVG_20C–HR	2 NPT	1 1/4 NPT	3	2 5/16		1 5/8	15 1/2	5/8	13 3/4	11	3 – 10	10 3/4	1 7/8	15° 0'	10° 0'	45° 0'					98 LB
SVG_25C–HR	2 1/2 NPT									14	3 – 13		2 1/4								116 LB
SVG_30C–HR	3 NPT	1 1/2 NPT	3 9/16	2 3/8			17 3/4		16 1/4	14 3/4	6 1/2 – 14	13	2 3/4	0°	22° 30'	22° 30'					176 LB
SVG_35C–HR										15 3/4	6 1/2 – 15		3 1/16								169 LB
SVG_40C–HR	4 RPM	2 NPT	6 7/8	4 15/16	2 1/4	1 7/8							3 5/8	45° 0'	30° 0'		7	8	19/32	5 15/16	175 LB
SVG_60C–HR	6 RPM	2 1/2 NPT	9 1/4	6 7/16	2 11/16	15 9/16	21 1/4	3/4	19 1/4			16	4 5/8	0°	–60° 0'	15° 0'	9			7 7/8	280 LB
SVG_80C–HR	8 RPM	3 NPT			3	15 13/16	23 1/4		21 1/4	18	6 1/2 – 17	18	6 1/2	22° 30'	–37° 30'		11		5/8	10	381 LB

NOTE:
1. BURNER MOUNTING FLANGE LOCATION "L" IS AVAILABLE IN 1/2" INCREMENTS WITHIN THE LISTED MIN–MAX RANGE AND MUST BE SPECIFIED.

Y7287
(NOT TO SCALE)

(See Reverse Side For Metric Dimensions)

In accordance with Hauck's commitment to Total Quality Improvement, Hauck reserves the right to change the specifications of products without prior notice.

METRIC DIMENSIONS

SVG SUPER VERSATILE GAS BURNER

HIGH VELOCITY ROUND TILE
SVGE10C-HR – SVGE80C-HR

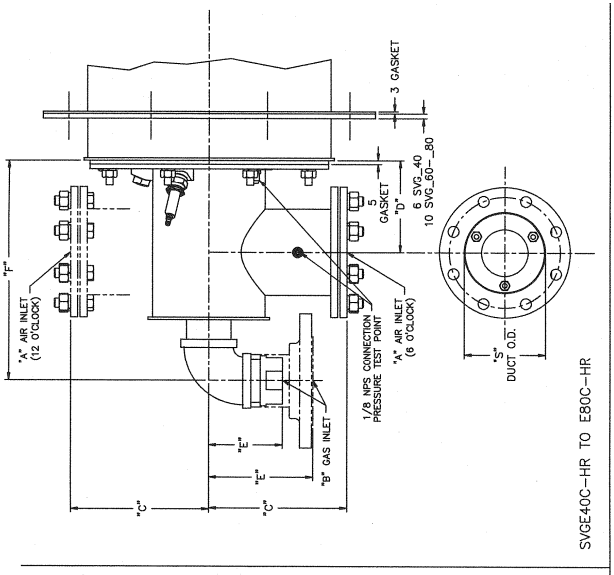

SVGE40C–HR TO E80C–HR

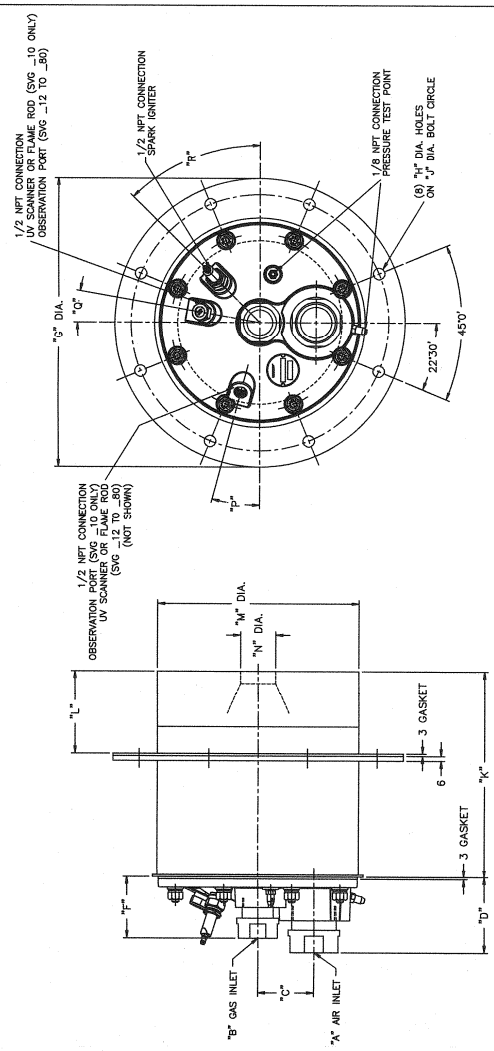

SVGE10C–HR TO E35C–HR

MODEL NO.	A	B	C	D	E	F	G	H	J	K	L	M	N	P	Q	R	S	APPROX. NET WT.
SVGE10C–HR	1 RP	3/4 RP	41	85		56	241	13	203	222	76 – 203	159	21	10° 0'	20° 0'	30° 0'		13 KG
SVGE12C–HR	1 1/2 RP	1 RP	51			82	305		267	231	76 – 203		29					20 KG
SVGE15C–HR										316	76 – 292	187	37					25 KG
SVGE20C–HR	2 RP		76	102		83	394	16	349	279	76 – 254	273	48	15° 0'	10° 0'	45° 0'		45 KG
SVGE25C–HR	2 1/2 RP	1 1/2 RP								356	76 – 330		57					53 KG
SVGE30C–HR	3 RP		91	121			451		413	375	165 – 356	330	70	0°	22° 30'	22° 30'		80 KG
SVGE35C–HR													78					77 KG
SVGE40C–HR	4 RPM	2 RP	188	125	3.9375	302			400	400	165 – 381		92	45° 0'	30° 0'		114	80 KG
SVGE60C–HR	6 RPM	DIN 65	248	164	5.813	395	540	19	489			406	117	0°	–60° 0'	15° 0'	159	127 KG
SVGE80C–HR	8 RPM	DIN 80			6.25	402	591		540	457	165 – 432	457	165	22° 30'	–37° 30'		210	172 KG

Y7287 METRIC
(NOT TO SCALE)

NOTE:
1. ALL DIMENSIONS ARE IN MM.
2. BURNER MOUNTING FLANGE LOCATION "L" IS AVAILABLE IN 13MM INCREMENTS WITHIN THE LISTED MIN–MAX RANGE AND MUST BE SPECIFIED.

In accordance with Hauck's commitment to Total Quality Improvement, Hauck reserves the right to change the specifications of products without prior notice.

HAUCK MANUFACTURING CO., P.O. Box 90 Lebanon, PA 17042-0090 717-272-3051
Fax: 717-273-9882

SVG SUPER VERSATILE GAS BURNER

HIGH VELOCITY SQUARE TILE
SVG _10C-HS – SVG _40SC-HS

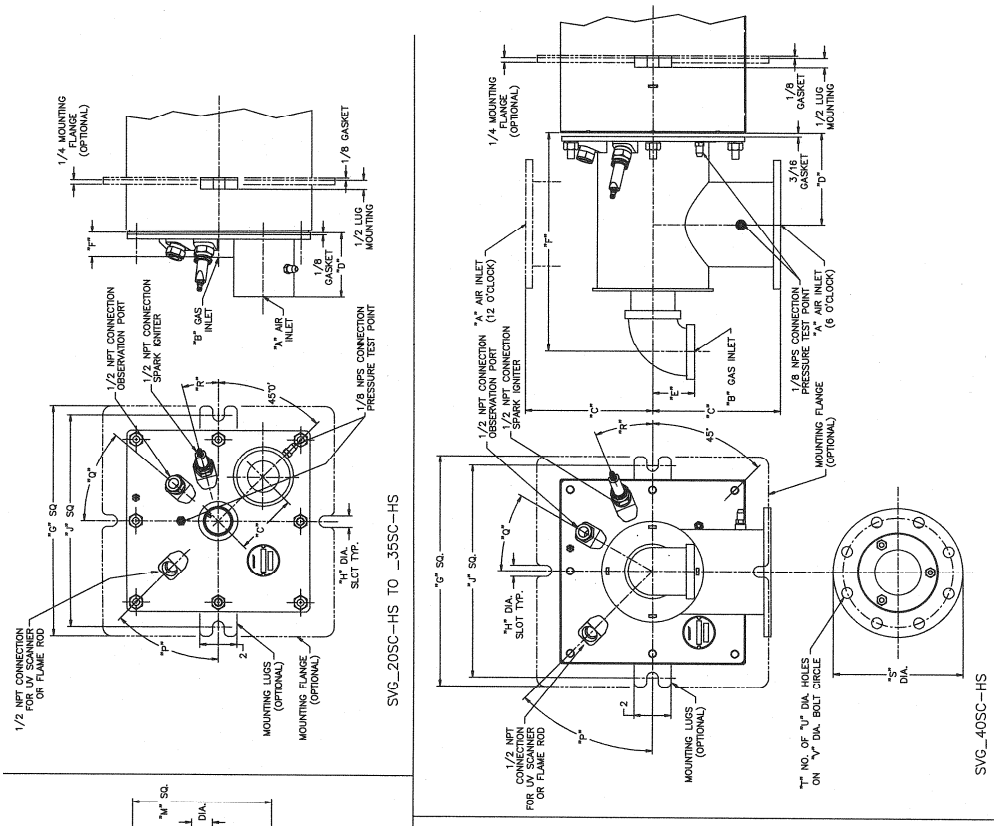

Y7288
(NOT TO SCALE)

MODEL NO.	A	B	C	D	E	F	G	H	J	K
SVG_10C–HS	1 NPT	3/4 NPT	1 5/8	1 23/32		15/16	10	5/8	9	8 3/4
SVG_12C–HS	1 1/4 NPT	1 NPT	2			1 23/32				9 3/32
SVG_15C–HS	1 1/2 NPT					2 7/16				12 7/16
SVG_20SC–HS	2 NPT	1 1/4 NPS	2 3/4	2 7/16						11
SVG_25SC–HS	2 1/2 NPT			1 7/8		1 11/32	12 1/2		11 1/2	14
SVG_30SC–HS	3 NPT	1 1/2 NPS	3 5/8	3 5/8						
SVG_35SC–HS										
SVG_40SC–HS	4 RPM	2 NPT	6 7/8	4 15/16	2 1/4	11 7/8				16 1/4

MODEL NO.	L (MIN–MAX)	M	N	P	Q	R	S	T	U	V	APPROX. NET WT.
SVG_10C–HS	3 – 8	7 1/2	13/16	10° 0'	20° 0'	30° 0'					47 LB
SVG_12C–HS			1 1/8								49 LB
SVG_15C–HS	3 – 11 1/2		1 7/16								66 LB
SVG_20SC–HS	3 – 10		1 7/8		40° 0'	15° 0'					52 LB
SVG_25SC–HS	3 – 13		2 1/4	45° 0'							112 LB
SVG_30SC–HS	3 – 13 1/2	10	2 3/4		22° 30'	22° 30'					116 LB
SVG_35SC–HS			3 1/16								117 LB
SVG_40SC–HS	3 – 15		3 5/8				7	8	19/32	5 15/16	121 LB

NOTE:
1. BURNER MOUNTING FLANGE LOCATION "L" IS AVAILABLE IN 1/2" INCREMENTS WITHIN THE LISTED MIN–MAX RANGE AND MUST BE SPECIFIED.

(See Reverse Side For Metric Dimensions)

In accordance with Hauck's commitment to Total Quality Improvement, Hauck reserves the right to change the specifications of products without prior notice.

HAUCK MANUFACTURING CO., P.O. Box 90 Lebanon, PA 17042-0090 717-272-3051
www.hauckburner.com Fax: 717-273-9882

METRIC DIMENSIONS

SVG SUPER VERSATILE GAS BURNER

HIGH VELOCITY SQUARE TILE
SVGE10C-HS – SVGE40SC-HS

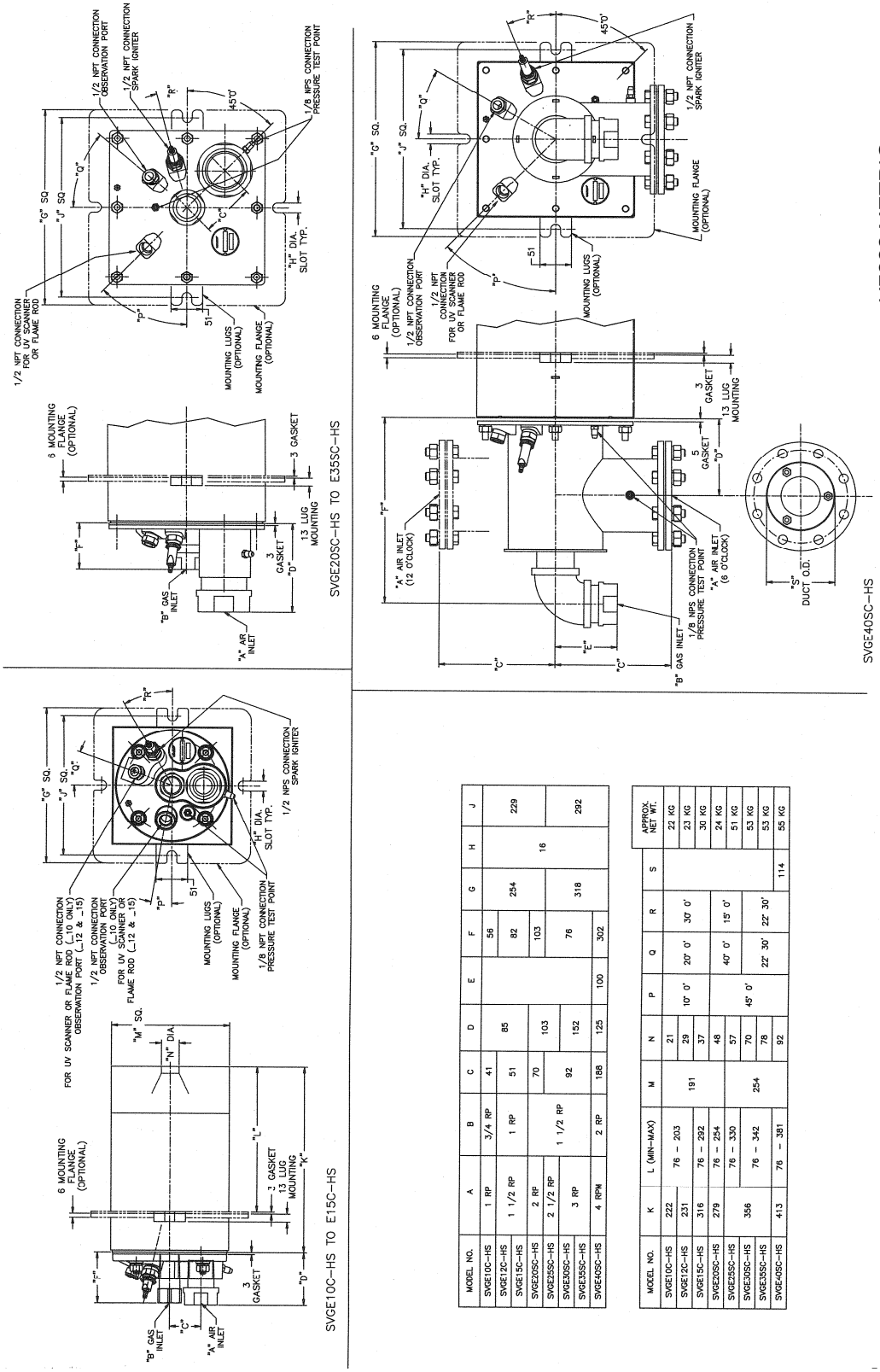

MODEL NO.	A	B	C	D	E	F	G	H	J
SVGE10C–HS	1 RP	3/4 RP	41	85		56	254	16	229
SVGE12C–HS	1 1/2 RP	1 RP	51			82			
SVGE15C–HS									
SVGE20SC–HS	2 RP		70	103		103			
SVGE25SC–HS	2 1/2 RP	1 1/2 RP							
SVGE30SC–HS	3 RP		92	152		76	318		292
SVGE35SC–HS									
SVGE40SC–HS	4 RPN	2 RP	188	125	100	302			

MODEL NO.	K	L (MIN–MAX)	M	N	P	Q	R	S	APPROX. NET WT.
SVGE10C–HS	222	76 – 203	191	21	10° 0'	20° 0'	30° 0'	114	22 KG
SVGE12C–HS	231			29					23 KG
SVGE15C–HS	316	76 – 292		37					30 KG
SVGE20SC–HS	279	76 – 254		48		40° 0'	15° 0'		24 KG
SVGE25SC–HS	356	76 – 330	254	57	45° 0'				51 KG
SVGE30SC–HS		76 – 342		70		22° 30'	22° 30'		53 KG
SVGE35SC–HS				78					53 KG
SVGE40SC–HS	413	76 – 381		92					55 KG

NOTE:
1. ALL DIMENSIONS ARE IN MM.
2. BURNER MOUNTING FLANGE LOCATION "L" IS AVAILABLE IN 13MM INCREMENTS WITHIN THE LISTED MIN–MAX RANGE AND MUST BE SPECIFIED.

In accordance with Hauck's commitment to Total Quality Improvement, Hauck reserves the right to change the specifications of products without prior notice.

HAUCK MANUFACTURING CO., P.O. Box 90 Lebanon, PA 17042-0090 717-272-3051
Fax: 717-273-9882

SVG SUPER VERSATILE GAS BURNER

HAUCK TAIL SQUARE TILE
SVG_20SC-HT – SVG _40SC-HT

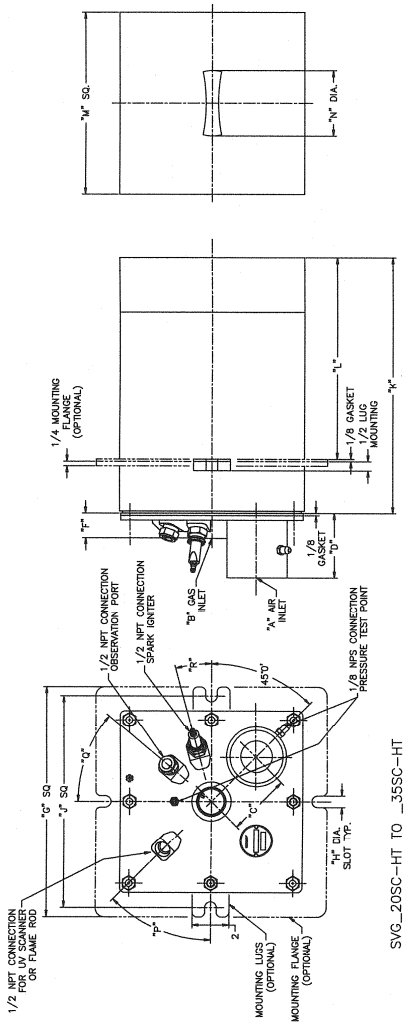

SVG_20SC–HT TO _35SC–HT

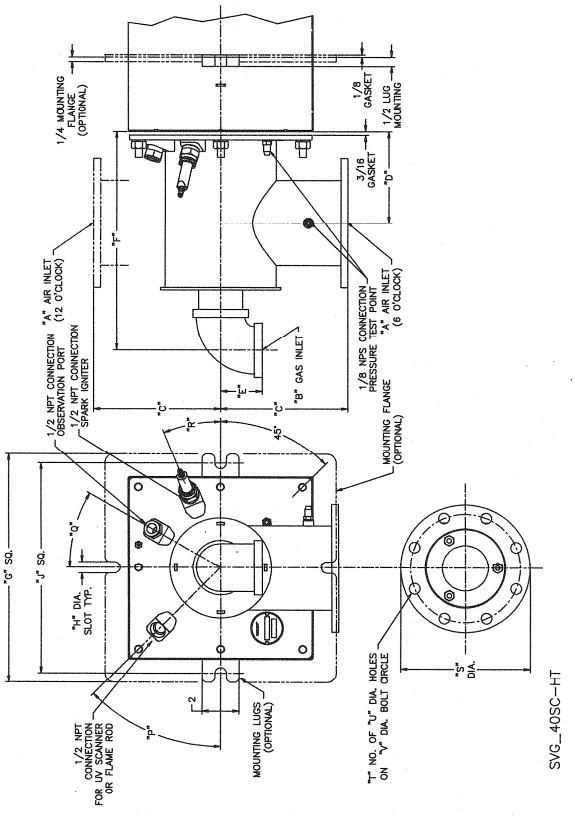

SVG_40SC–HT

Y8735
(NOT TO SCALE)

MODEL NO.	A	B	C	D	E	F	G	H	J	K
SVG_20SC–HT	2 NPT	1 1/4 NPS	2 3/4	2 7/16		2 7/16	10	5/8	9	11
SVG_25SC–HT	2 1/2 NPT			1 7/8						
SVG_30SC–HT	3 NPT	1 1/2 NPS	3 5/8	3 5/8		1 11/32	12 1/2		11 1/2	14
SVG_35SC–HT										
SVG_40SC–HT	4 RPM	2 NPT	6 7/8	4 15/16	2 1/4	11 7/8				16 1/4

MODEL NO.	L (MIN–MAX)	M	N	P	Q	R	S	T	U	V	APPROX. NET WT.
SVG_20SC–HT	3 – 10	7 1/2	3 9/16	45° 0'	40° 0'	15° 0'					52 LB
SVG_25SC–HT	3 – 13		4 1/4								112 LB
SVG_30SC–HT	3 – 13 1/2	10	5 3/8		22° 30'	22° 30'					116 LB
SVG_35SC–HT			5 7/8								117 LB
SVG_40SC–HT	3 – 15		6 3/4				7	8	19/32	5 15/16	121 LB

NOTE:
1. BURNER MOUNTING FLANGE LOCATION "L" IS AVAILABLE IN 1/2" INCREMENTS WITHIN THE LISTED MIN–MAX RANGE AND MUST BE SPECIFIED.

(See Reverse Side For Metric Dimensions)

In accordance with Hauck's commitment to Total Quality Improvement, Hauck reserves the right to change the specifications of products without prior notice.

METRIC DIMENSIONS

SVG SUPER VERSATILE GAS BURNER

HAUCK TAIL SQUARE TILE
SVGE20SC-HT – SVGE40SC-HT

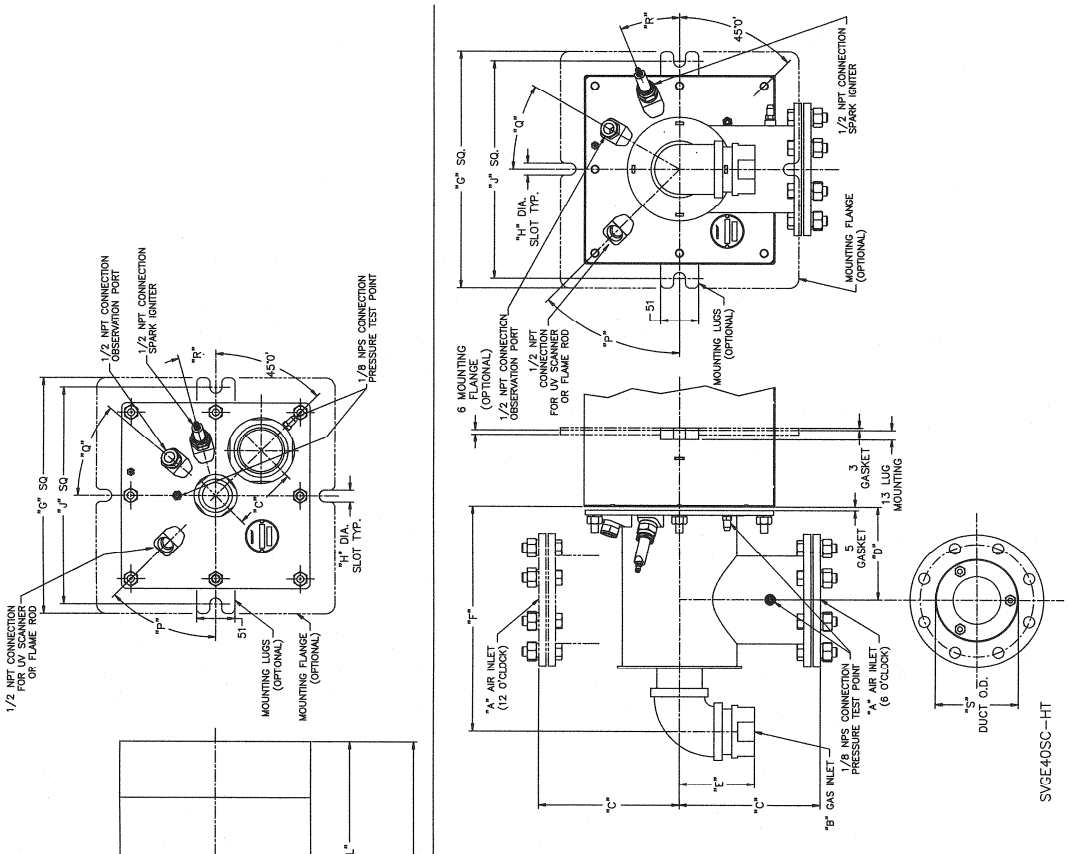

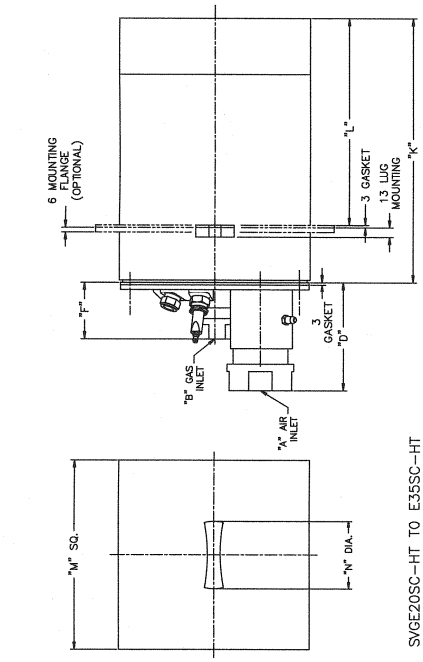

SVGE20SC–HT TO E35SC–HT

Y8735 METRIC
(NOT TO SCALE)

MODEL NO.	A	B	C	D	E	F	G	H	J
SVGE20SC–HT	2 RP	1 1/2 RP	70	103		103	254	16	229
SVGE25SC–HT	2 1/2 RP		92			76	318		292
SVGE30SC–HT	3 RP			152					
SVGE35SC–HT				125	100	302			
SVGE40SC–HT	4 RPM	2 RP	188						

MODEL NO.	K	L (MIN–MAX)	M	N	P	Q	R	S	APPROX. NET WT.
SVGE20SC–HT	279	76 – 254	191	90	45° 0'	40° 0'	15° 0'		24 KG
SVGE25SC–HT	356	76 – 330	254	108		22° 30'	22° 30'		51 KG
SVGE30SC–HT		76 – 342		137					53 KG
SVGE35SC–HT				149					53 KG
SVGE40SC–HT	413	76 – 381		171				114	55 KG

NOTE:
1. ALL DIMENSIONS ARE IN MM.
NOTE:
1. ALL DIMENSIONS ARE IN MM.
2. BURNER MOUNTING FLANGE LOCATION "L" IS AVAILABLE IN 13MM INCREMENTS WITHIN THE LISTED MIN–MAX RANGE AND MUST BE SPECIFIED.

In accordance with Hauck's commitment to Total Quality Improvement, Hauck reserves the right to change the specifications of products without prior notice.

HAUCK MANUFACTURING CO., P.O. Box 90 Lebanon, PA 17042-0090 717-272-3051
Fax: 717-273-9882

SVG SUPER VERSATILE GAS BURNER

HIGH VELOCITY CERAMIC TUBE
SVG_10C-HC – SVG _60C-HC

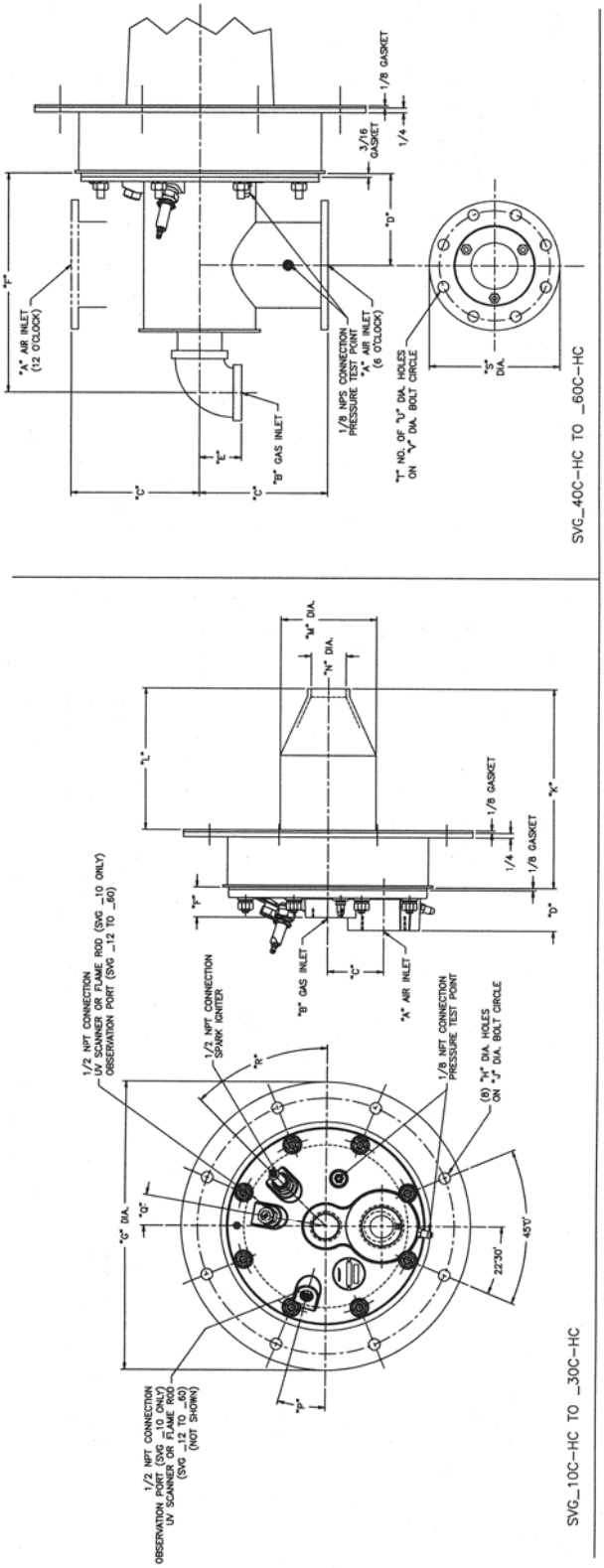

MODEL NO.	A	B	C	D	E	F	G	H	J	K	L	M	N	P	Q	R	S	T	U	V	APPROX. NET WT.
SVG_10C-HC	1 NPT	3/4 NPT	1 5/8	1 23/32		15/16	13 3/4	5/8	12	8 11/16	5 13/16	3 1/4	13/16	10° 0'	20° 0'	30° 0'					21 LB
SVG_12C-HC	1 1/4 NPT	1 NPT	2			1 23/32				9 1/16	6 11/16	4	1 1/8								26 LB
SVG_15C-HC	1 1/2 NPT									12	9 1/4		1 7/16								26 LB
SVG_20C-HC	2 NPT	1 1/4 NPT	3	2 5/16		1 5/8	15 1/2		13 3/4	10 13/16	7 11/16	5 1/8	1 7/8	15° 0'	10° 0'	45° 0'					37 LB
SVG_25C-HC	2 1/2 NPT									13 1/2	10 9/16	5 11/16	2 1/4								39 LB
SVG_30C-HC	3 NPT	1 1/2 NPT	3 9/16	2 3/8			17 3/4		16 1/4	14 3/4	11 1/16	6 3/8	2 3/4	0°	22° 30'	22° 30'					54 LB
SVG_40C-HC	4 RPM	2 NPT	6 7/8	4 15/16	2 1/4	11 7/8				15 3/4	12 1/16	7 3/4	3 5/8	45° 0'	30° 0'		7	8	19/32	5 15/16	58 LB
SVG_60C-HC	6 RPM	2 1/2 NPT	9 1/4	6 7/16	2 11/16	15 9/16	21 1/4	3/4	19 1/4	15 7/8	12 1/4	9 1/8	4 5/8	0°	-60° 0'	15° 0'	9			7 7/8	100 LB

Y7119
(NOT TO SCALE)

(See Reverse Side For Metric Dimensions)

In accordance with Hauck's commitment to Total Quality Improvement, Hauck reserves the right to change the specifications of products without prior notice.

SVG SUPER VERSATILE GAS BURNER

HIGH VELOCITY CERAMIC TUBE
SVGE10C-HC – SVGE60C-HC

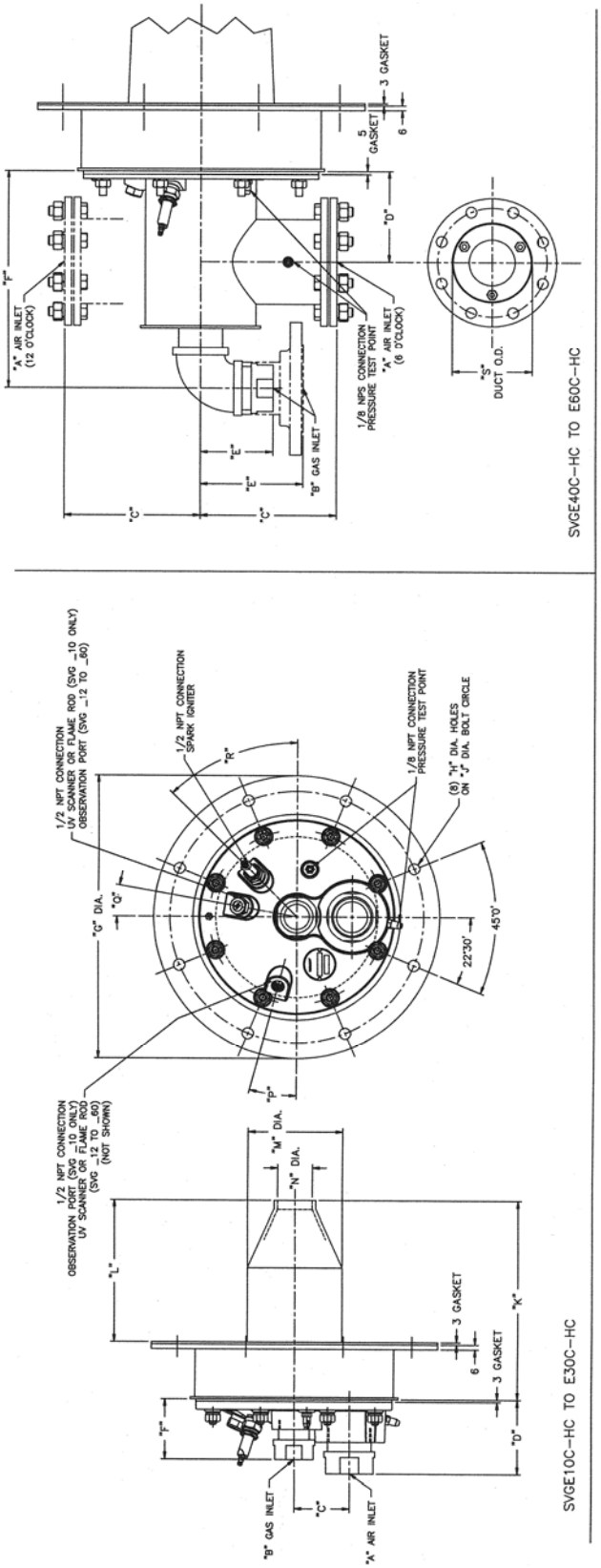

MODEL NO.	A	B	C	D	E	F	G	H	J	K	L	M	N	P	Q	R	S	APPROX. NET WT.
SVGE10C–HC	1 RP	3/4 RP	41	85		56	349	16	305	221	148	83	21	10° 0'	20° 0'	30° 0'		10 KG
SVGE12C–HC	1 1/2 RP	1 RP	51			82				230	170	102	29					12 KG
SVGE15C–HC										305	235		37					12 KG
SVGE20C–HC	2 RP	1 1/2 RP	76	102		83	394		349	275	195	130	48	15° 0'	10° 0'	45° 0'		17 KG
SVGE25C–HC	2 1/2 RP									343	268	144	57					18 KG
SVGE30C–HC	3 RP		91	121			451		413	375	281	162	70	0°	22° 30'	22° 30'		25 KG
SVGE40C–HC	4 RPM	2 RP	188	125	100	302				400	306	197	92	45° 0'	30° 0'		114	27 KG
SVGE60C–HC	6 RPM	DIN 65	248	164	148	395	540	19	489	403	311	232	117	0°	–60° 0'	15° 0'	159	46 KG

Y7119 METRIC
(NOT TO SCALE)

NOTE:
1. ALL DIMENSIONS ARE IN MM.

In accordance with Hauck's commitment to Total Quality Improvement, Hauck reserves the right to change the specifications of products without prior notice.

HAUCK MANUFACTURING CO., P.O. Box 90 Lebanon, PA 17042-0090 717-272-3051
Fax: 717-273-9882

SVG SUPER VERSATILE GAS BURNER

HIGH VELOCITY ALLOY TUBE
SVG _10C-HA – SVG _80C-HA

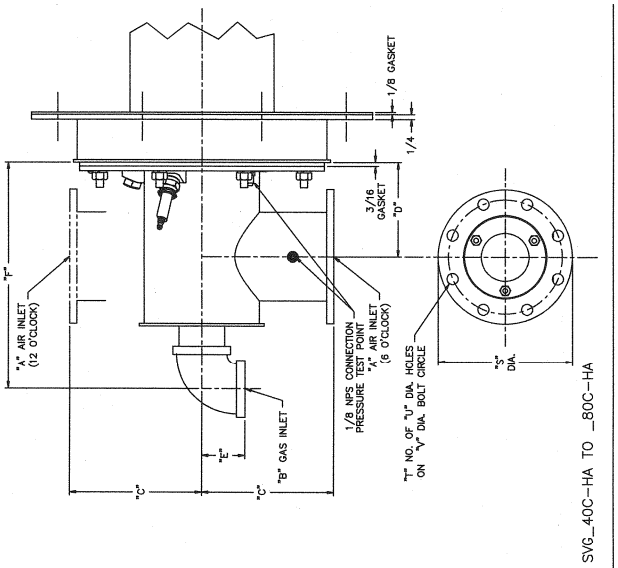

SVG_40C–HA TO _80C–HA

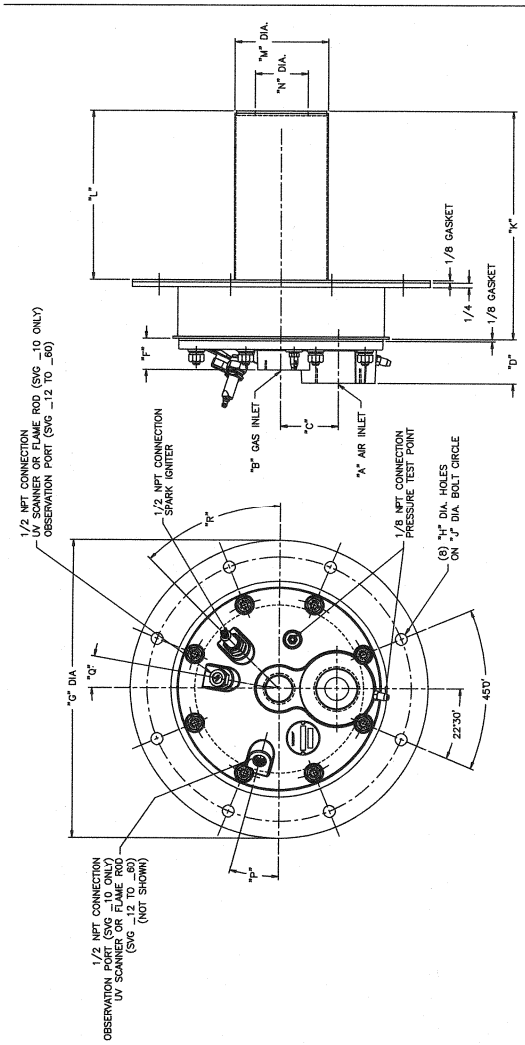

SVG_10C–HA TO _30C–HA

MODEL NO.	A	B	C	D	E	F	G	H	J	K	L	M	N	P	Q	R	S	T	U	V	APPROX. NET WT.
SVG_10C–HA	1 NPT	3/4 NPT	1 5/8	1 23/32		15/16	9 1/2	1/2	8	8 15/16	6 7/8	3	1	10° 0'	20° 0'	30° 0'					13 LB
SVG_12C–HA	1 1/4 NPT	1 NPT	2			1 23/32	12		10 1/2	10 15/32	8 7/8	3 3/4	1 19/32								20 LB
SVG_15C–HA	1 1/2 NPT												1 27/32								20 LB
SVG_20C–HA	2 NPT	1 1/4 NPT	3	2 5/16		1 5/8	15 1/2	5/8	13 3/4	11		4 3/4	2 1/8	15° 0'	10° 0'	45° 0'					36 LB
SVG_25C–HA	2 1/2 NPT											5 7/16	2 5/8								36 LB
SVG_30C–HA	3 NPT	1 1/2 NPT	3 9/16	2 3/8			17 3/4		16 1/4	11 3/4		6 1/8	3	0°	22° 30'	22° 30'					51 LB
SVG_40C–HA	4 RPM	2 NPT	6 7/8	4 15/16	2 1/4	11 7/8					13 1/8	7 1/2	4	45° 0'	30° 0'		7	8	19/32	5 15/16	56 LB
SVG_60C–HA	6 RPM	2 1/2 NPT	9 1/4	6 7/16	2 11/16	15 9/16	21 1/4	3/4	19 1/4	15 3/4		8 3/4	5 1/4	0°	−60° 0'	15° 0'	9			7 7/8	85 LB
SVG_80C–HA	8 RPM	3 NPT			3	15 13/16	23 1/4		21 1/4			10 19/32	6 13/16	22° 30'	−37° 30'		11		5/8	10	105 LB

Y7286
(NOT TO SCALE)

(See Reverse Side For Metric Dimensions)

In accordance with Hauck's commitment to Total Quality Improvement, Hauck reserves the right to change the specifications of products without prior notice.

SVG SUPER VERSATILE GAS BURNER

HIGH VELOCITY ALLOY TUBE
SVGE10C-HA – SVGE80C-HA

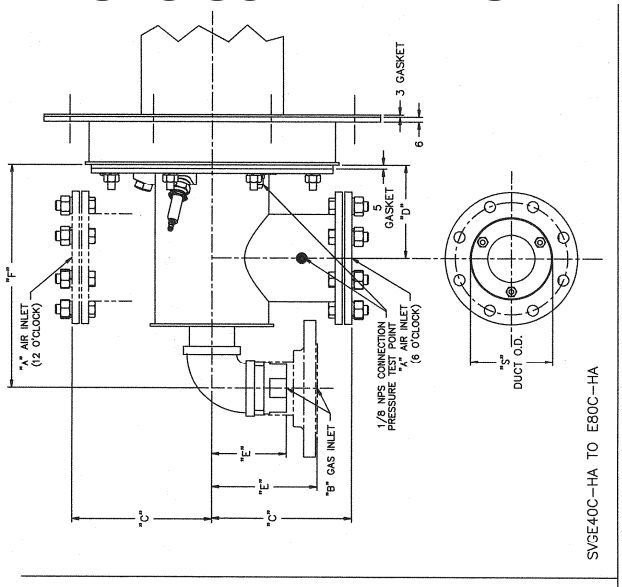

SVGE40C–HA TO E80C–HA

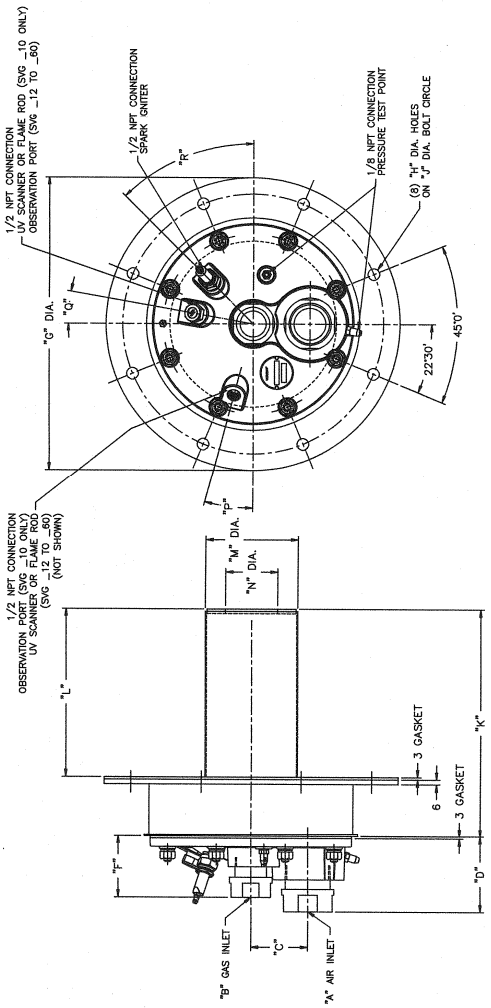

SVGE10C–HA TO E30C–HA

MODEL NO.	A	B	C	D	E	F	G	H	J	K	L	M	N	P	Q	R	S	APPROX. NET WT.
SVGE10C–HA	1 RP	3/4 RP	41	85		56	241	13	203	227	175	76	25	10° 0'	20° 0'	30° 0'		6 KG
SVGE12C–HA	1 1/2 RP	1 RP	51			82	305	16	267	258	225	95	40					9 KG
SVGE15C–HA													47					9 KG
SVGE20C–HA	2 RP	1 1/2 RP	76	102		83	394		349	279		121	54	15° 0'	10° 0'	45° 0'		17 KG
SVGE25C–HA	2 1/2 RP											138	67					17 KG
SVGE30C–HA	3 RP		90	121			451		413	298		156	76	0°	22° 30'	22° 30'		23 KG
SVGE40C–HA	4 RPM	2 RP	188	125	100	302				400	333	191	102	45° 0'	30° 0'		114	26 LB
SVGE60C–HA	6 RPM	DIN 65	248	164	148	395	540	19	489			222	133	0°	–60° 0'	15° 0'	159	39 LB
SVGE80C–HA	8 RPM	DIN 80			159	402	591		540			269	174	22° 30'	–37° 30'		210	48 KG

Y7286 METRIC
(NOT TO SCALE)

NOTE:
1. ALL DIMENSIONS ARE IN MM.

In accordance with Hauck's commitment to Total Quality Improvement, Hauck reserves the right to change the specifications of products without prior notice.

HAUCK MANUFACTURING CO., P.O. Box 90 Lebanon, PA 17042-0090 717-272-3051
Fax: 717-273-9882

SVG SUPER VERSATILE GAS BURNER

MEDIUM VELOCITY ROUND TILE
SVG _10C-MR – SVG _80C-MR

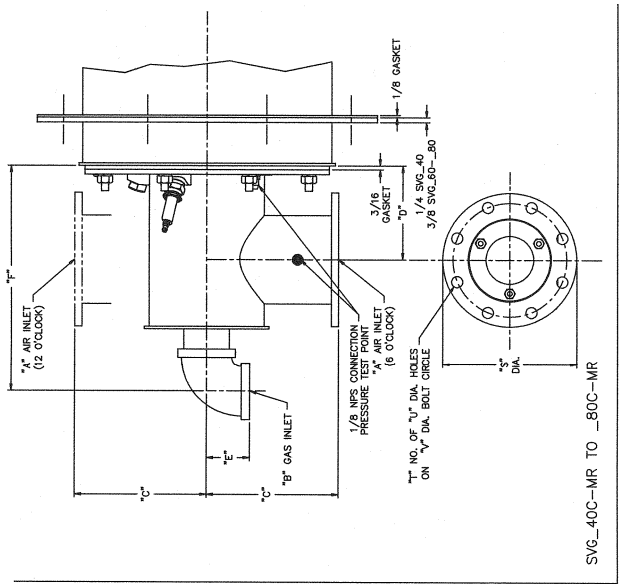

SVG_40C–MR TO _80C–MR

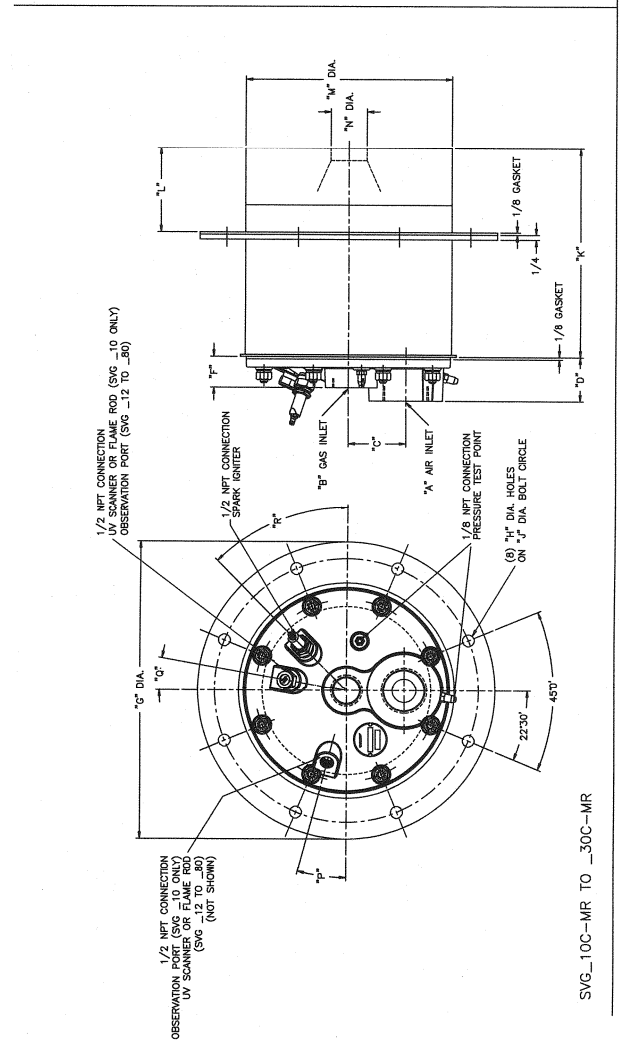

SVG_10C–MR TO _30C–MR

MODEL NO.	A	B	C	D	E	F	G	H	J	K	L	M	N	P	Q	R	S	T	U	V	APPROX. NET WT.
SVG_10C–MR	1 NPT	3/4 NPT	1 5/8	1 23/32		15/16	9 1/2	1/2	8	8 3/4	3 – 8	6 1/4	1 1/16	10° 0'	20° 0'	30° 0'					28 LB
SVG_12C–MR	1 1/4 NPT	1 NPT	2			1 23/32	12		10 1/2	9 3/32	3 – 8	7 3/8	1 5/8								42 LB
SVG_15C–MR	1 1/2 NPT									12 7/16	3 – 11 1/2		2								53 LB
SVG_20C–MR	2 NPT	1 1/4 NPT	3	2 5/16		1 5/8	15 1/2	5/8	13 3/4	11	3 – 10	10 3/4	2 9/16	15° 0'	10° 0'	45° 0'					97 LB
SVG_25C–MR	2 1/2 NPT									14	3 – 13		3 1/4								116 LB
SVG_30C–MR	3 NPT	1 1/2 NPT	3 9/16	2 3/8			17 3/4		16 1/4	14 3/4	6 1/2 – 14	13	3 5/8	0°	22° 30'	22° 30'					171 LB
SVG_40C–MR	4 RPM	2 NPT	6 7/8	4 15/16	2 1/4	11 7/8				15 3/4	6 1/2 – 15		4 9/16	45° 0'	30° 0'		7		19/32	5 15/16	173 LB
SVG_60C–MR	6 RPM	2 1/2 NPT	9 1/4	6 7/16	2 11/16	15 9/16	21 1/4	3/4	19 1/4			16	6 1/4	0°	–60° 0'		9	8		7 7/8	274 LB
SVG_80C–MR	8 RPM	3 NPT			3	15 13/16	23 1/4		21 1/4	18	6 1/2 – 17	18	8 5/8	22° 30'	–37° 30'	15° 0'	11		5/8	10	371 LB

Y7290
(NOT TO SCALE)

NOTE:
1. BURNER MOUNTING FLANGE LOCATION "L" IS AVAILABLE IN 1/2" INCREMENTS WITHIN THE LISTED MIN–MAX RANGE AND MUST BE SPECIFIED.

(See Reverse Side For Metric Dimensions)

In accordance with Hauck's commitment to Total Quality Improvement, Hauck reserves the right to change the specifications of products without prior notice.

HAUCK MANUFACTURING CO., P.O. Box 90 Lebanon, PA 17042-0090 717-272-3051
www.hauckburner.com Fax: 717-273-9882

METRIC DIMENSIONS

SVG SUPER VERSATILE GAS BURNER

MEDIUM VELOCITY ROUND TILE
SVGE10C-MR – SVGE80C-MR

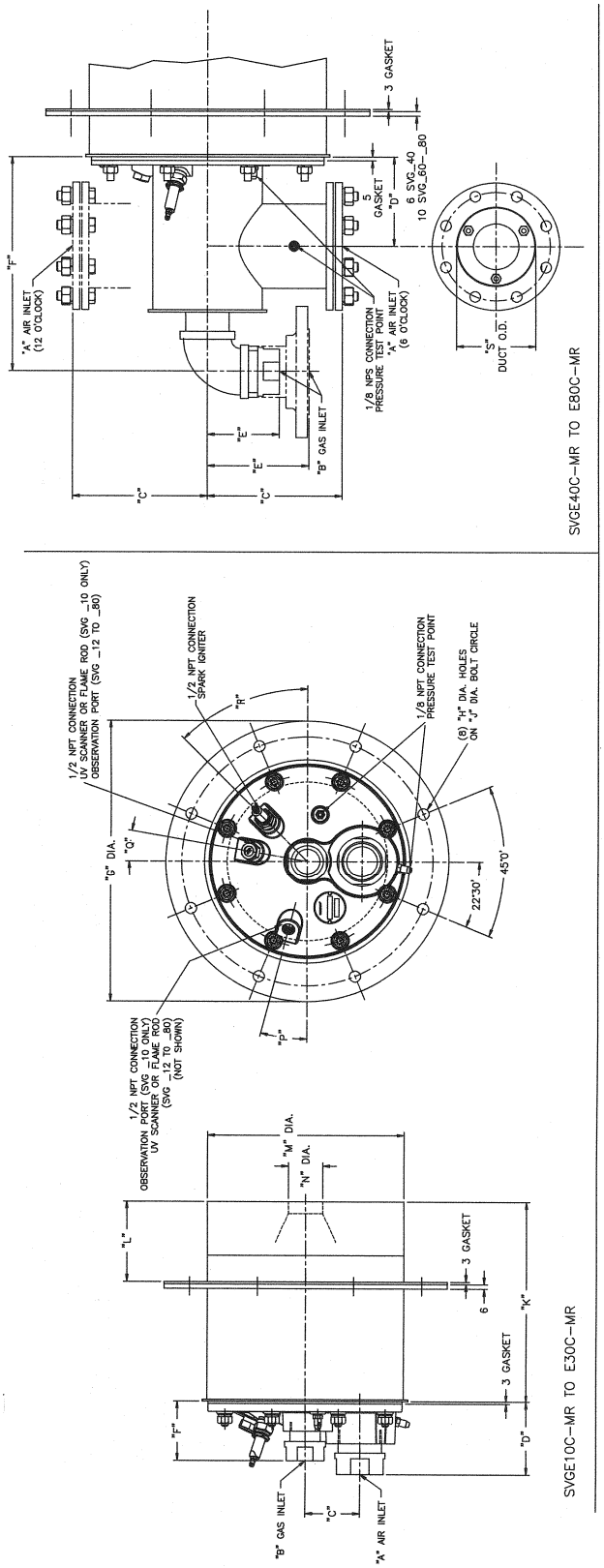

MODEL NO.	A	B	C	D	E	F	G	H	J	K	L	M	N	P	Q	R	S	T	U	V	APPROX. NET WT.
SVG_10C–MR	1 NPT	3/4 NPT	1 5/8	1 23/32		15/16	9 1/2	1/2	8	8 3/4	3 – 8	6 1/4	1 1/16	10° 0'	20° 0'	30° 0'					28 LB
SVG_12C–MR	1 1/4 NPT	1 NPT	2			1 23/32	12		10 1/2	9 3/32	3 – 8	7 3/8	1 5/8								42 LB
SVG_15C–MR	1 1/2 NPT									12 7/16	3 – 11 1/2		2								53 LB
SVG_20C–MR	2 NPT	1 1/4 NPT	3	2 5/16		1 5/8	15 1/2	5/8	13 3/4	11	3 – 10	10 3/4	2 9/16	15° 0'	10° 0'	45° 0'					97 LB
SVG_25C–MR	2 1/2 NPT									14	3 – 13		3 1/4								116 LB
SVG_30C–MR	3 NPT	1 1/2 NPT	3 9/16	2 3/8			17 3/4		16 1/4	14 3/4	6 1/2 – 14	13	3 5/8	0°	22° 30'	22° 30'	7	8	19/32	5 15/16	116 LB
SVG_40C–MR	4 RPM	2 NPT	6 7/8	4 15/16	2 1/4	11 7/8				15 3/4	6 1/2 – 15		4 9/16	45° 0'	30° 0'						171 LB
SVG_60C–MR	6 RPM	2 1/2 NPT	9 1/4	6 7/16	2 11/16	15 9/16	21 1/4	3/4	19 1/4			16	6 1/4	0°	–60° 0'	15° 0'	9		7 7/8	173 LB
SVG_80C–MR	8 RPM	3 NPT			3	15 13/16	23 1/4		21 1/4	18	6 1/2 – 17	18	8 5/8	22° 30'	–37° 30'		11		5/8	10	371 LB

Y7290 METRIC
(NOT TO SCALE)

NOTE:
1. ALL DIMENSIONS ARE IN MM.
2. BURNER MOUNTING FLANGE LOCATION "L" IS AVAILABLE IN 13MM INCREMENTS WITHIN THE LISTED MIN–MAX RANGE AND MUST BE SPECIFIED.

In accordance with Hauck's commitment to Total Quality Improvement, Hauck reserves the right to change the specifications of products without prior notice.

HAUCK MANUFACTURING CO., P.O. Box 90 Lebanon, PA 17042-0090 717-272-3051
Fax: 717-273-9882

SVG SUPER VERSATILE GAS BURNER

MEDIUM VELOCITY SQUARE TILE
SVG _10C-MS – SVG _40SC-MS

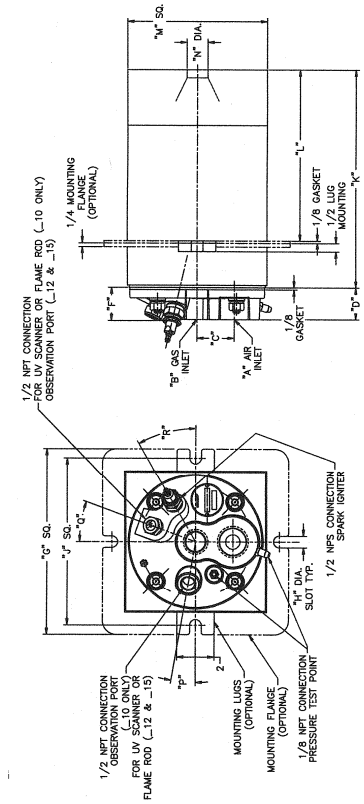

SVG_10C–MS TO _15C–MS

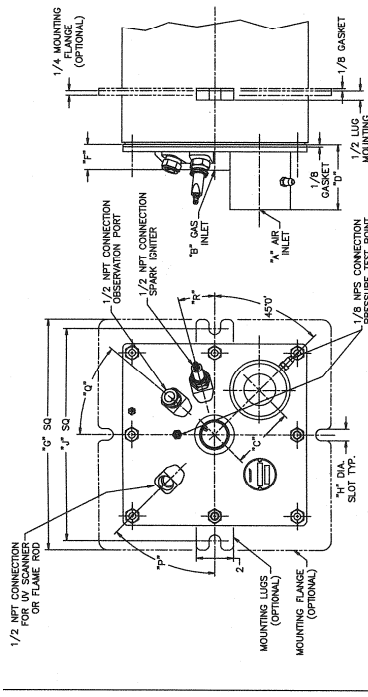

SVG_20SC–MS TO _30SC–MS

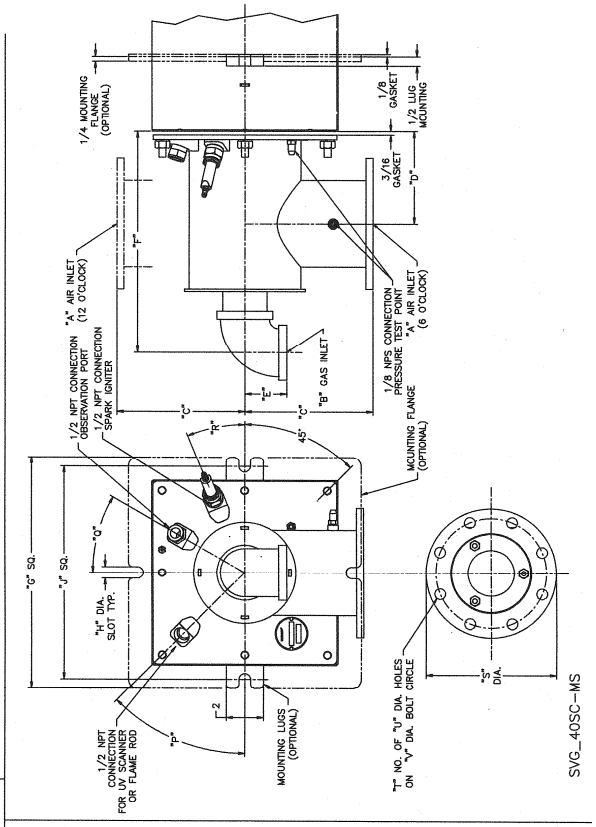

SVG_40SC–MS

Y7775
(NOT TO SCALE)

MODEL NO.	A	B	C	D	E	F	G	H	J	K
SVG_10C–MS	1 NPT	3/4 NPT	1 5/8	1 23/32		15/16	10	5/8	9	8 3/4
SVG_12C–MS	1 1/4 NPT	1 NPT	2			1 23/32				9 3/32
SVG_15C–MS	1 1/2 NPT									12 7/16
SVG_20SC–MS	2 NPT	1 1/4 NPS	2 3/4	2 7/16		2 7/16				11
SVG_25SC–MS	2 1/2 NPT		3 5/8	1 7/8		1 11/32				14
SVG_30SC–MS	3 NPT	1 1/2 NPS		3 5/8			12 1/2		11 1/2	14 3/4
SVG_40SC–MS	4 RPM	2 NPT	6 7/8	4 15/16	2 1/4	11 7/8				15 3/4

MODEL NO.	L (MIN–MAX)	M	N	P	Q	R	S	T	U	V	APPROX. NET WT.
SVG_10C–MS	3 – 8	7 1/2	1 1/16	10° 0'	20° 0'	30° 0'					47 LB
SVG_12C–MS			1 5/8								49 LB
SVG_15C–MS	3 – 11 1/2		2								65 LB
SVG_20SC–MS	3 – 10		2 9/16	45° 0'	40° 0'	15° 0'					50 LB
SVG_25SC–MS	3 – 13		3 1/4								110 LB
SVG_30SC–MS	3 – 13 1/2	10	3 5/8		22° 30'	22° 30'	7	8	19/32	5 15/16	114 LB
SVG_40SC–MS	3 – 15		4 9/16								115 LB

NOTE:
1. BURNER MOUNTING FLANGE LOCATION "L" IS AVAILABLE IN 1/2" INCREMENTS WITHIN THE LISTED MIN–MAX RANGE AND MUST BE SPECIFIED.

(See Reverse Side For Metric Dimensions)

In accordance with Hauck's commitment to Total Quality Improvement, Hauck reserves the right to change the specifications of products without prior notice.

HAUCK MANUFACTURING CO., P.O. Box 90 Lebanon, PA 17042-0090 717-272-3051
www.hauckburner.com Fax: 717-273-9882

METRIC DIMENSIONS

SVG SUPER VERSATILE GAS BURNER

MEDIUM VELOCITY SQUARE TILE
SVGE10C-MS – SVGE40SC-MS

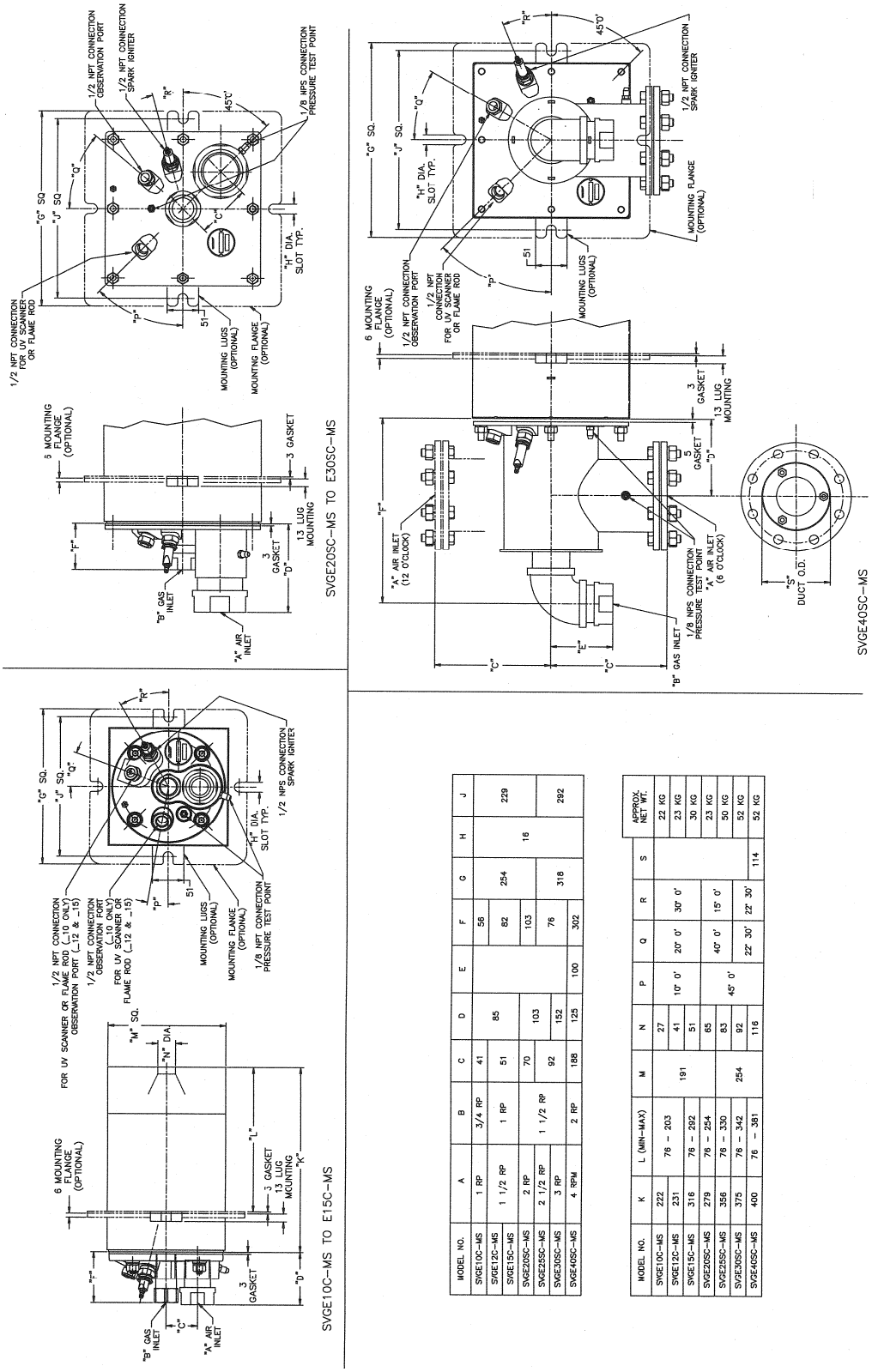

MODEL NO.	A	B	C	D	E	F	G	H	J
SVGE10C–MS	1 RP	3/4 RP	41	85		56	254	16	229
SVGE12C–MS	1 1/2 RP	1 RP	51			82			
SVGE15C–MS									
SVGE20SC–MS	2 RP	1 1/2 RP	70	103		103			
SVGE25SC–MS	2 1/2 RP		92			76	318		292
SVGE30SC–MS	3 RP			152					
SVGE40SC–MS	4 RPM	2 RP	188	125	100	302			

MODEL NO.	K	L (MIN–MAX)	M	N	P	Q	R	S	APPROX. NET WT.
SVGE10C–MS	222	76 – 203	191	27	10° 0'	20° 0'	30° 0'		22 KG
SVGE12C–MS	231			41					23 KG
SVGE15C–MS	316	76 – 292		51					30 KG
SVGE20SC–MS	279	76 – 254		85	45° 0'	40° 0'	15° 0'		23 KG
SVGE25SC–MS	356	76 – 330	254	83					50 KG
SVGE30SC–MS	375	76 – 342		92		22° 30'	22° 30'		52 KG
SVGE40SC–MS	400	76 – 381		116				114	52 KG

Y7775 METRIC
(NOT TO SCALE)

NOTE:
1. ALL DIMENSIONS ARE IN MM.
2. BURNER MOUNTING FLANGE LOCATION "L" IS AVAILABLE IN 13MM INCREMENTS WITHIN THE LISTED MIN–MAX RANGE AND MUST BE SPECIFIED.

In accordance with Hauck's commitment to Total Quality Improvement, Hauck reserves the right to change the specifications of products without prior notice.

HAUCK MANUFACTURING CO., P.O. Box 90 Lebanon, PA 17042-0090 717-272-3051
Fax: 717-273-9882

SVG SUPER VERSATILE GAS BURNER

MEDIUM VELOCITY ALLOY TUBE
SVG _10C-MA – SVG _80C-MA

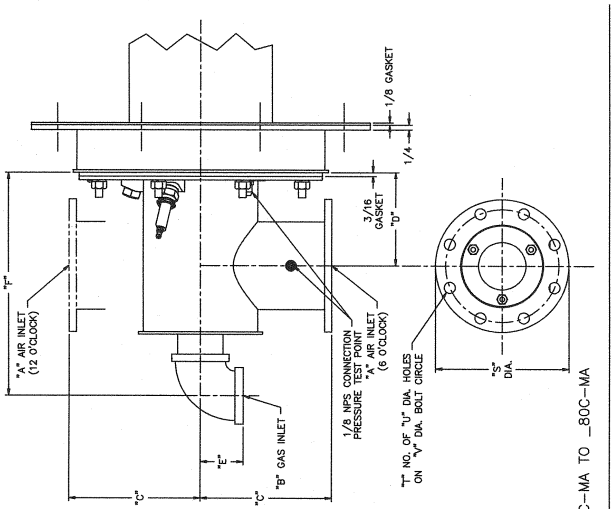

SVG_40C–MA TO _80C–MA

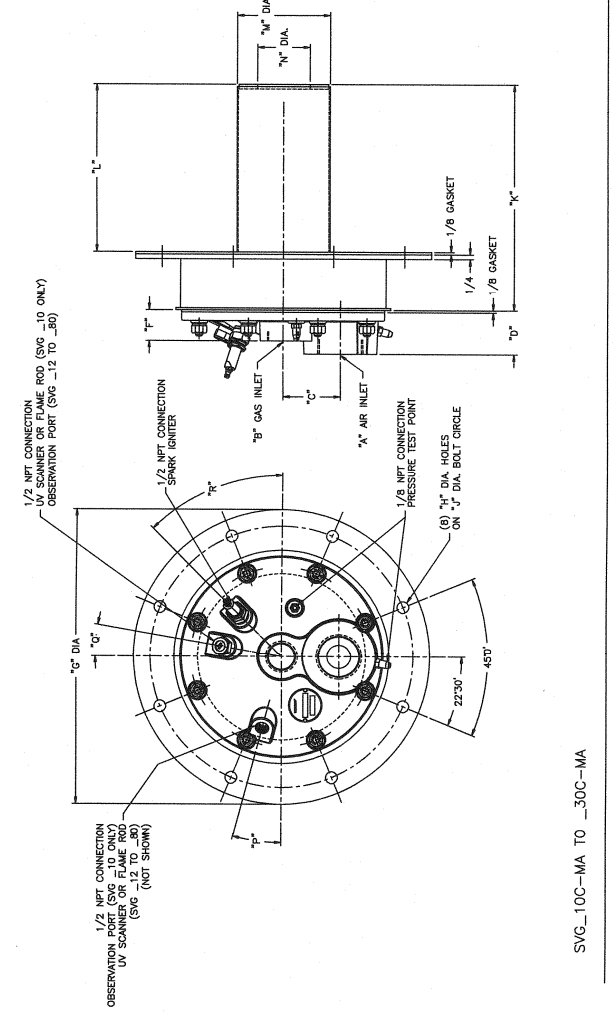

SVG_10C–MA TO _30C–MA

MODEL NO.	A	B	C	D	E	F	G	H	J	K	L	M	N	P	Q	R	S	T	U	V	APPROX. NET WT.
SVG_10C–MA	1 NPT	3/4 NPT	1 5/8	1 23/32		15/16	9 1/2	1/2	8	8 15/16	6 7/8	3	1 1/2	10° 0'	20° 0'	30° 0'					13 LB
SVG_12C–MA	1 1/4 NPT	1 NPT	2			1 23/32	12		10 1/2	10 15/32		3 3/4	2								20 LB
SVG_15C–MA	1 1/2 NPT												2 1/4								20 LB
SVG_20C–MA	2 NPT	1 1/4 NPT	3	2 5/16		1 5/8	15 1/2	5/8	13 3/4	11	8 7/8	4 3/4	3	15° 0'	10° 0'	45° 0'					36 LB
SVG_25C–MA	2 1/2 NPT											5 7/16	3 5/8								36 LB
SVG_30C–MA	3 NPT	1 1/2 NPT	3 9/16	2 3/8			17 3/4		16 1/4	11 3/4		6 1/8	3 31/32	0°	22° 30'	22° 30'					51 LB
SVG_40C–MA	4 RPM	2 NPT	6 7/8	4 15/16	2 1/4	11 7/8						7 1/2	5 3/8	45° 0'	30° 0'		7	8	19/32	5 15/16	56 LB
SVG_60C–MA	6 RPM	2 1/2 NPT	9 1/4	6 7/16	2 11/16	15 9/16	21 1/4	3/4	19 1/4	15 3/4	13 1/8	8 3/4	6 11/16	0°	–60° 0'	15° 0'	9			7 7/8	85 LB
SVG_80C–MA	8 RPM	3 NPT			3	15 13/16	23 1/4		21 1/4			10 19/32	8 11/16	22° 30'	–37° 30'		11		5/8	10	105 LB

Y7289
(NOT TO SCALE)

(See Reverse Side For Metric Dimensions)

In accordance with Hauck's commitment to Total Quality Improvement, Hauck reserves the right to change the specifications of products without prior notice.

HAUCK MANUFACTURING CO., P.O. Box 90 Lebanon, PA 17042-0090 717-272-3051
www.hauckburner.com Fax: 717-273-9882

SVG SUPER VERSATILE GAS BURNER

MEDIUM VELOCITY ALLOY TUBE SVGE10C-MA – SVGE80C-MA

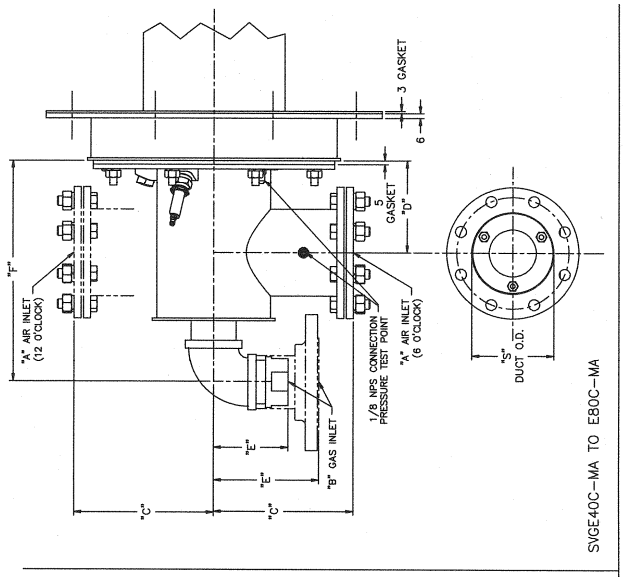

SVGE40C–MA TO E80C–MA

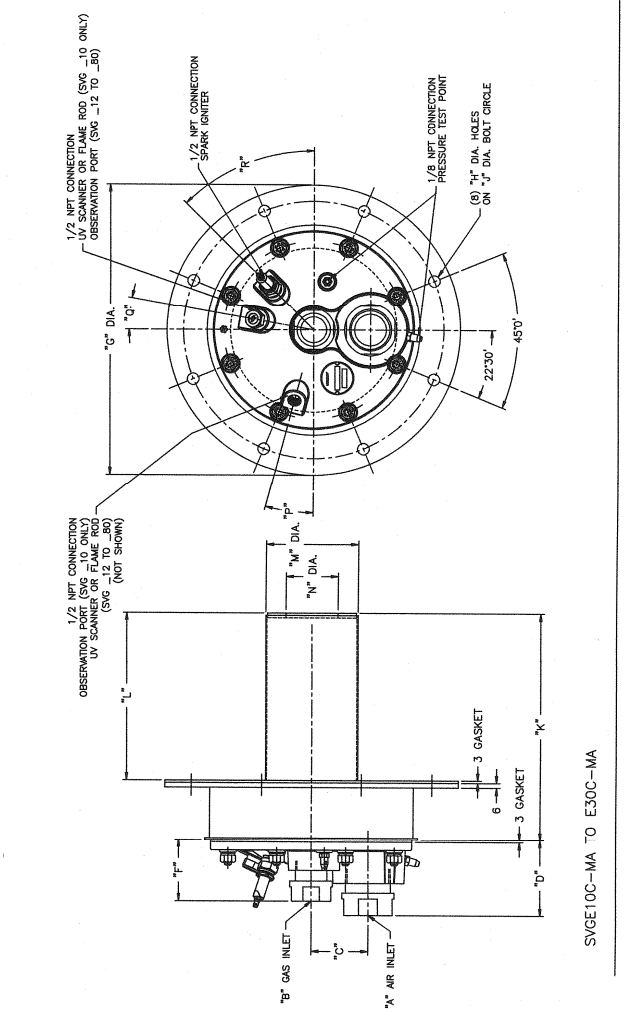

SVGE10C–MA TO E30C–MA

MODEL NO.	A	B	C	D	E	F	G	H	J	K	L	M	N	P	Q	R	S	APPROX. NET WT.
SVGE10C–MA	1 RP	3/4 RP	41	85		56	241	13	203	227	175	76	38	10° 0'	20° 0'	30° 0'		6 KG
SVGE12C–MA	1 1/2 RP	1 RP	51			82	305	16	267	266	225	95	51					9 KG
SVGE15C–MA													57					9 KG
SVGE20C–MA	2 RP	1 1/2 RP	76	102		83	394		349	279		121	76	15° 0'	10° 0'	45° 0'		17 KG
SVGE25C–MA	2 1/2 RP											138	92					17 KG
SVGE30C–MA	3 RP		90	197			451		413	298		156	101	0°	22° 30'	22° 30'		23 KG
SVGE40C–MA	4 RPM	2 RP	188	125	100	302				400	333	191	137	45° 0'	30° 0'		114	26 KG
SVGE60C–MA	6 RPM	DIN 65	248	164	148	421	540	19	489			222	170	0°	–60° 0'	15° 0'	159	39 KG
SVGE80C–MA	8 RPM	DIN 80			159	402	591		540			269	221	22° 30'	–37° 30'		210	48 KG

Y7289 METRIC
(NOT TO SCALE)

NOTE:
1. ALL DIMENSIONS ARE IN MM.

In accordance with Hauck's commitment to Total Quality Improvement, Hauck reserves the right to change the specifications of products without prior notice.

HAUCK MANUFACTURING CO., P.O. Box 90 Lebanon, PA 17042-0090 717-272-3051
Fax: 717-273-9882

SVG SUPER VERSATILE GAS BURNER

CAST IN PLACE
SVG_10C-CP – SVG _80C-CP

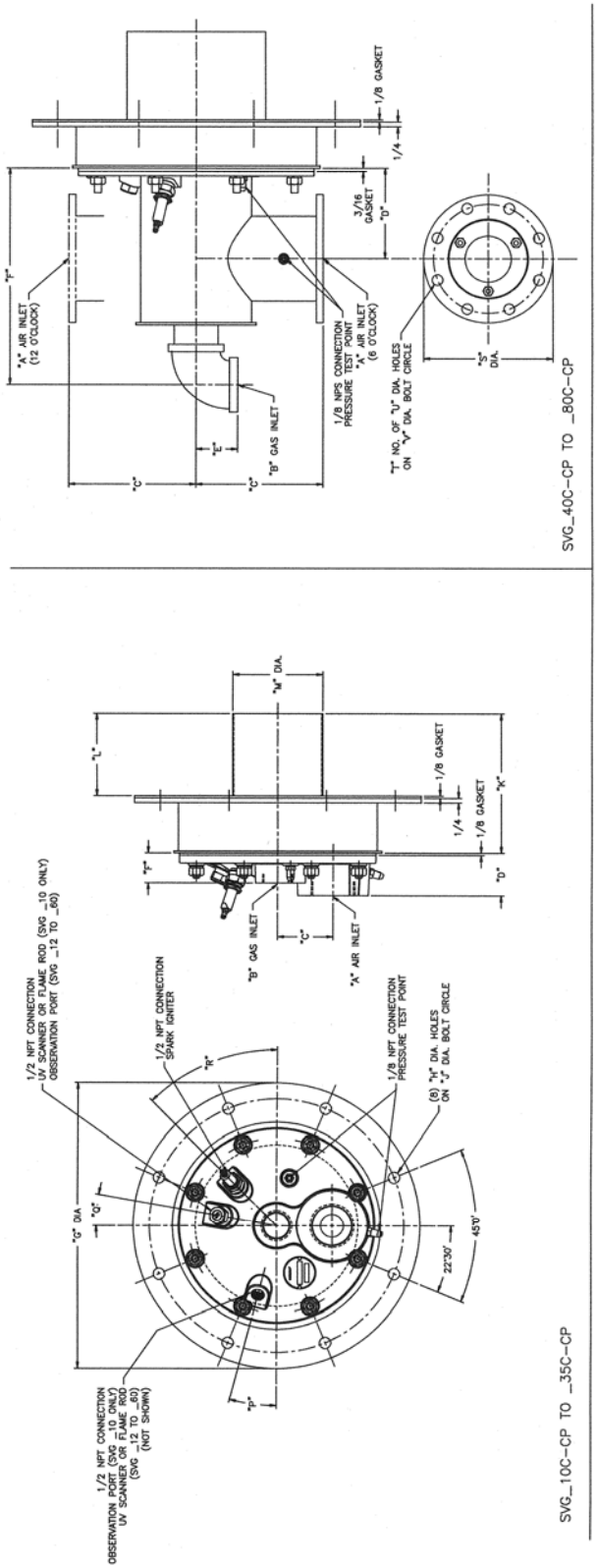

MODEL NO.	A	B	C	D	E	F	G	H	J	K	L	M	P	Q	R	S	T	U	V	APPROX. NET WT.
SVG_10C-CP	1 NPT	3/4 NPT	1 5/8	1 23/32		15/16	9 1/2	1/2	8	5 9/16	3 1/2	2 15/16	10° 0'	20° 0'	30° 0'					13 LB
SVG_12C-CP	1 1/4 NPT	1 NPT	2			1 23/32	12		10 1/2	5 15/16	4 3/8	3 3/4								20 LB
SVG_15C-CP	1 1/2 NPT																			20 LB
SVG_20C-CP	2 NPT	1 1/4 NPT	3	2 5/16		1 5/8	15 1/2	5/8	13 3/4	6 1/4	4 1/8	4 3/4	15° 0'	10° 0'	45° 0'					36 LB
SVG_25C-CP	2 1/2 NPT									6 3/4	4 5/8	5 7/16								36 LB
SVG_30C-CP	3 NPT	1 1/2 NPT	3 9/16	2 3/8			17 3/4			7	4 1/8	6 3/32	0°	22° 30'	22° 30'					51 LB
SVG_35C-CP									16 1/4	7 1/4	4 3/8	7 1/2								51 LB
SVG_40C-CP	4 RPM	2 NPT	6 7/8	4 15/16	2 1/4	11 7/8				7 3/8	4 3/4		45° 0'	30° 0'		7	8	19/32	5 15/16	56 LB
SVG_60C-CP	6 RPM	2 1/2 NPT	9 1/4	6 7/16	2 11/16	15 9/16	21 1/4	3/4	19 1/4	8	5 3/8	8 3/4	0°	-60° 0'	15° 0'	9			7 7/8	85 LB
SVG_80C-CP	8 RPM	3 NPT			3	15 13/16	23 1/4		21 1/4			10 3/8	22° 30'	-37° 30'		11		5/8	10	105 LB

Y8830
(NOT TO SCALE)

(See Reverse Side For Metric Dimensions)

In accordance with Hauck's commitment to Total Quality Improvement, Hauck reserves the right to change the specifications of products without prior notice.

SVG SUPER VERSATILE GAS BURNER

HIGH VELOCITY HAUCK TAIL SQUARE TILE
SVGE10C-CP – SVGE80C-CP

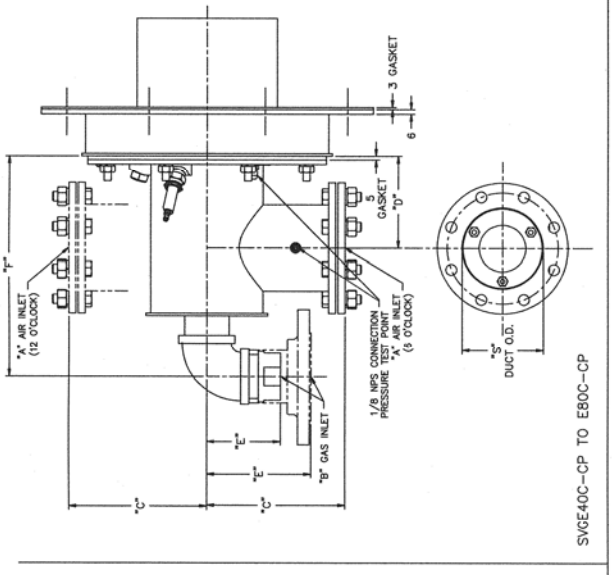

SVGE40C–CP TO E80C–CP

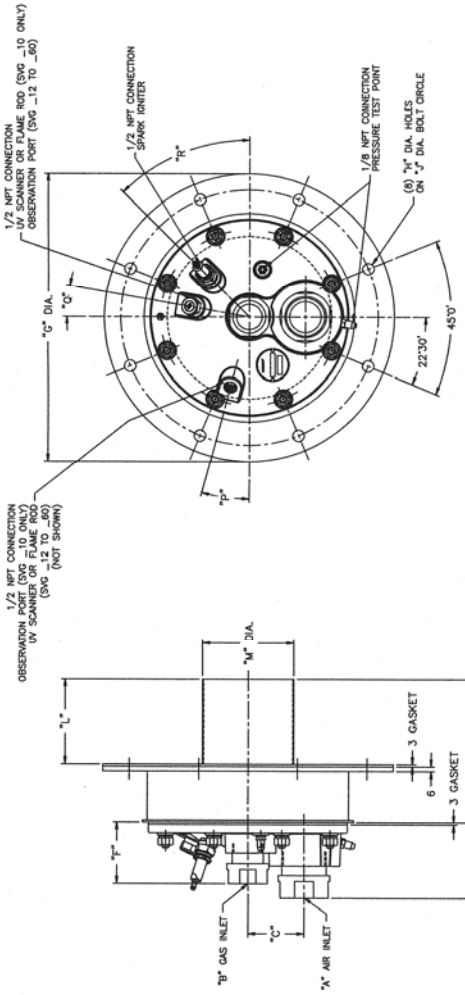

SVGE10C–CP TO E35C–CP

MODEL NO.	A	B	C	D	E	F	G	H	J	K	L	M	P	Q	R	S	APPROX. NET WT.
SVGE10C–CP	1 RP	3/4 RP	41	85		56	241	13	203	141	89	75	10° 0'	20° 0'	30° 0'		6 KG
SVGE12C–CP	1 1/2 RP	1 RP	51			82	305		267	151	111	95					9 KG
SVGE15C–CP																	9 KG
SVGE20C–CP	2 RP	1 1/2 RP	76	102		83	394	16	349	159	105	121	15° 0'	10° 0'	45° 0'		17 KG
SVGE25C–CP	2 1/2 RP									171	117	138					17 KG
SVGE30C–CP	3 RP		90	121			451		413	178	105	155	0°	22° 30'	22° 30'		23 KG
SVGE35C–CP										184	111	191					23 KG
SVGE40C–CP	4 RPM	2 RP	188	125	100	302				187	121		45° 0'	30° 0'		114	26 LB
SVGE60C–CP	6 RPM	DIN 65	248	164	148	395	540	19	489	203	137	222	0°	–60° 0'	15° 0'	159	39 LB
SVGE80C–CP	8 RPM	DIN 80			159	402	591		540			264	22° 30'	–37° 30'		210	48 KG

Y8830 METRIC
(NOT TO SCALE)

NOTE:
1. ALL DIMENSIONS ARE IN MM.

In accordance with Hauck's commitment to Total Quality Improvement, Hauck reserves the right to change the specifications of products without prior notice.

HAUCK MANUFACTURING CO., P.O. Box 90 Lebanon, PA 17042-0090 717-272-3051
Fax: 717-273-9882

SVG SUPER VERSATILE GAS BURNER

BURNER MODEL SVG 110 / 210

	TILE DESIGNATION						
	HR	**HS**	**HC**	**HA**	**MR**	**MS**	**MA**
	High Velocity Round	High Velocity Square	High Velocity Ceramic	High Velocity Alloy	Medium Velocity Round	Medium Velocity Square	Medium Velocity Alloy
BURNER SPECIFICATIONS – HIGH FIRE							
Burner Static Inlet Air Pressure for 110 / 210 (osig)	16	16	16	16	16	16	16
	8	8	8	9.2	8	8	8
Max. Input @ 10% Excess Air (10^3 Btu/hr)	**110**	**110**	**110**	**95**	**120**	**120**	**120**
Max. Air Flow for 110 / 210 (scfh)	1,140	1,140	1,140	1,040	1,240	1,240	1,240
Min. Input @ Max. Air Flow (10^3 Btu/hr)	6.0	6.0	6.0	5.8	6.5	6.5	8.0
Max. Excess Air (%)	2,000	2,000	2,000	2,000	2,000	2,000	1,500
Air Orifice ΔP for 110 / 210 ("wc)	22.5	22.5	22.5	22.7	25.5	25.5	26.5
	8.5	8.5	8.5	10.9	10.0	10.0	10.4
Gas Inlet Pressure ("wc)	5.5	5.5	5.5	5.4	2.7	2.7	1.5
Flame Length @ Max. Input (in)	10	10	10	10	12	12	10
Flame Diameter @ Max. Input (in)	2	2	2	2	2.5	2.5	2
BURNER SPECIFICATIONS - LOW FIRE	**BURNER STATIC INLET AIR PRESSURE OF 0.17 OSIG (110) / 0.10 OSIG (210)**						
Input @ 10% Excess Air (10^3 Btu/hr)	**10.6**	**10.6**	**10.6**	**10.6**	**12.5**	**12.5**	**12.1**
Air Flow for 110 / 210 (scfh)	110	110	110	110	130	130	125
Min. Input @ Air Flow (10^3 Btu/hr)	3.3	3.3	3.3	3.8	3.5	3.5	3.8
Max. Excess Air (%)	250	250	250	300	300	300	250

NOTES:

1. Capacities based on natural gas with HHV of 1034 Btu/ft^3, 0.59 S.G., and an stoichiometric air:gas ratio of 9.74:1 with burner firing into chamber under no pressure @ 10% excess air. For **CP** model capacities, refer to data as listed under the appropriate HR, HS, MR or MS tile designation.
2. Air and gas flows based on 60°F @ sea level.
3. Static air pressure measured at the burner air inlet pressure tap.
4. Flame lengths measured from the end of the burner tile.
5. All data based on industry standard air and gas piping practices.
6. Flame detection available via UV scanner or flame rod.
7. Burners can be operated above the rated static inlet air pressure; consult Hauck.

(See Reverse Side for Metric Data)

In accordance with Hauck's commitment to Total Quality Improvement, Hauck reserves the right to change the specifications of products without prior notice.

HAUCK MANUFACTURING CO., P.O. Box 90 Lebanon, PA 17042-0090 717-272-3051
www.hauckburner.com Fax: 717-273-9882

SVG SUPER VERSATILE GAS BURNER
BURNER MODEL SVG-E10

		TILE DESIGNATION						
		HR	**HS**	**HC**	**HA**	**MR**	**MS**	**MA**
		High Velocity Round	High Velocity Square	High Velocity Ceramic	High Velocity Alloy	Medium Velocity Round	Medium Velocity Square	Medium Velocity Alloy
BURNER SPECIFICATIONS – HIGH FIRE								
Burner Static Inlet Air Pressure E10	(Pa)	3,450	3,450	3,450	3,450	3,450	3,450	3,450
Max. Input @ 10% Excess Air	**(kW)**	**29.1**	**29.1**	**29.1**	**24.8**	**31.7**	**31.7**	**31.7**
Max. Air Flow @ 3,450 Pa	(nm^3/hr)	30.5	30.5	30.5	27.5	33.2	33.2	33.2
Min. Input @ Max. Air Flow	(kW)	1.6	1.6	1.6	1.5	1.7	1.7	2.1
Max. Excess Air	(%)	2,000	2,000	2,000	2,000	2,000	2,000	1,500
Air Orifice ΔP	(Pa)	2,100	2,100	2,100	2,360	2,500	2,500	2,600
Gas Inlet Pressure	(Pa)	1,370	1,370	1,370	1,170	670	670	375
Flame Length @ Max. Input	(mm)	255	255	255	255	305	305	255
Flame Diameter @ Max. Input	(mm)	50	50	50	50	65	65	50
BURNER SPECIFICATIONS - LOW FIRE		**BURNER STATIC INLET AIR PRESSURE OF 45 Pa**						
Input @ 10% Excess Air	**(kW)**	**2.9**	**2.9**	**2.9**	**2.8**	**3.3**	**3.3**	**3.2**
Air Flow @ 45 Pa	(nm^3/hr)	3.0	3.0	3.0	2.9	3.5	3.5	3.4
Min. Input @ Air Flow	(kW)	0.9	0.9	0.9	1.0	0.9	0.9	1.0
Max. Excess Air	(%)	250	250	250	300	300	300	250

NOTES:

1. Capacities based on natural gas with LHV of 36.74 MJ/nm^3, 0.59 S.G., and an stoichiometric air:gas ratio of 9.74:1 with burner firing into chamber under no pressure @ 10% excess air. For **CP** model capacities, refer to data as listed under the appropriate HR, HS, MR or MS tile designation.
2. Air and gas flows based on 0°C @ sea level.
3. Static air pressures measured at the burner air inlet pressure tap.
4. Flame lengths measured from the end of the burner tile.
5. All data based on industry standard air and gas piping practices.
6. Flame detection available via UV scanner or flame rod.
7. Burners can be operated above the rated static air inlet pressure; consult Hauck.

In accordance with Hauck's commitment to Total Quality Improvement, Hauck reserves the right to change the specifications of products without prior notice.

HAUCK MANUFACTURING CO., P.O. Box 90 Lebanon, PA 17042-0090 717-272-3051
Fax: 717-273-9882

SVG SUPER VERSATILE GAS BURNER

BURNER MODEL SVG 112 / 212

	TILE DESIGNATION						
	HR	**HS**	**HC**	**HA**	**MR**	**MS**	**MA**
	High Velocity Round	High Velocity Square	High Velocity Ceramic	High Velocity Alloy	Medium Velocity Round	Medium Velocity Square	Medium Velocity Alloy
BURNER SPECIFICATIONS – HIGH FIRE							
Burner Static Inlet Air Pressure for 112 / 212 (osig)	16	16	16	16	16	16	16
	8	8	8	6.7	8	8	8
Max. Input @ 10% Excess Air (10^3 Btu/hr)	**250**	**250**	**250**	**240**	**275**	**275**	**260**
Max. Air Flow for 112 / 212 (scfh)	2,580	2,580	2,580	2,495	2,850	2,850	2,720
Min. Input @ Max. Air Flow (10^3 Btu/hr)	8.8	8.8	8.8	6.9	8.0	8.0	11.5
Max. Excess Air (%)	3,000	3,100	3,000	3,700	3,700	3,700	2,400
Air Orifice ΔP for 112 / 212 ("wc)	22.0	22.0	22.0	21.8	25.7	25.7	25.0
	3.5	3.5	3.5	3.7	4.3	4.3	3.9
Gas Inlet Pressure ("wc)	6.1	6.1	6.1	6.2	2.3	2.3	2.7
Flame Length @ Max. Input (in)	22	22	22	10	18	18	10
Flame Diameter @ Max. Input (in)	5	5	5	2	3.5	3.5	2
BURNER SPECIFICATIONS - LOW FIRE	**BURNER STATIC INLET AIR PRESSURE OF 0.17 OSIG (112) / 0.10 OSIG (212)**						
Input @ 10% Excess Air (10^3 Btu/hr)	**37.6**	**37.6**	**37.6**	**35.7**	**30.9**	**30.9**	**32.8**
Air Flow for 112 / 212 (scfh)	390	390	390	370	320	320	340
Min. Input @ Air Flow (10^3 Btu/hr)	8.3	8.3	8.3	3.8	3.4	3.4	6.0
Max. Excess Air (%)	400	400	400	1,000	900	900	500

NOTES:

1. Capacities based on natural gas with HHV of 1034 Btu/ft^3, 0.59 S.G., and an stoichiometric air:gas ratio of 9.74:1 with burner firing into chamber under no pressure @ 10% excess air. For **CP** model capacities, refer to data as listed under the appropriate HR, HS, MR or MS tile designation.
2. Air and gas flows based on 60°F @ sea level.
3. Static air pressure measured at the burner air inlet pressure tap.
4. Flame lengths measured from the end of the burner tile.
5. All data based on industry standard air and gas piping practices.
6. Flame detection available via UV scanner or flame rod.
7. Burners can be operated above the rated static inlet air pressure; consult Hauck.

(See Reverse Side for Metric Data)

In accordance with Hauck's commitment to Total Quality Improvement, Hauck reserves the right to change the specifications of products without prior notice.

HAUCK MANUFACTURING CO., P.O. Box 90 Lebanon, PA 17042-0090 717-272-3051
www.hauckburner.com Fax: 717-273-9882

SVG SUPER VERSATILE GAS BURNER
BURNER MODEL SVG-E12

		TILE DESIGNATION						
		HR	**HS**	**HC**	**HA**	**MR**	**MS**	**MA**
		High Velocity Round	High Velocity Square	High Velocity Ceramic	High Velocity Alloy	Medium Velocity Round	Medium Velocity Square	Medium Velocity Alloy
BURNER SPECIFICATIONS – HIGH FIRE								
Burner Static Inlet Air Pressure E12	(Pa)	3,450	3,450	3,450	3,450	3,450	3,450	3,450
Max. Input @ 10% Excess Air	**(kW)**	**66.1**	**66.1**	**66.1**	**69.5**	**72.7**	**72.7**	**69.2**
Max. Air Flow @ 3,450 Pa	(nm^3/hr)	69.0	69.0	69.0	72.8	76.3	76.3	72.7
Min. Input @ Max. Air Flow	(kW)	2.3	2.3	2.3	1.8	2.1	2.1	3.1
Max. Excess Air	(%)	3,000	3,000	3,000	3,700	3,700	3,700	2,400
Air Orifice ΔP	(Pa)	870	870	870	1,095	1,070	1,070	970
Gas Inlet Pressure	(Pa)	1,520	1,520	1,520	1,815	570	570	670
Flame Length @ Max. Input	(mm)	560	560	560	255	460	460	255
Flame Diameter @ Max. Input	(mm)	125	125	125	50	90	90	50
BURNER SPECIFICATIONS - LOW FIRE		**BURNER STATIC INLET AIR PRESSURE OF 45 Pa**						
Input @ 10% Excess Air	**(kW)**	**10.0**	**10.0**	**10.0**	**9.4**	**8.2**	**8.2**	**8.8**
Air Flow @ 45 Pa	(nm^3/hr)	10.5	10.5	10.5	**9.9**	8.6	8.6	9.2
Min. Input @ Air Flow	(kW)	2.2	2.2	2.2	1.0	0.9	0.9	1.6
Max. Excess Air	(%)	400	400	400	1,000	900	900	500

NOTES:

1. Capacities based on natural gas with LHV of 36.74 MJ/nm^3, 0.59 S.G., and an stoichiometric air:gas ratio of 9.74:1 with burner firing into chamber under no pressure @ 10% excess air. For **CP** model capacities, refer to data as listed under the appropriate HR, HS, MR, or MS tile designation.
2. Air and gas flows based on 0°C @ sea level.
3. Static air pressures measured at the burner air inlet pressure tap.
4. Flame lengths measured from the end of the burner tile.
5. All data based on industry standard air and gas piping practices.
6. Flame detection available via UV scanner or flame rod.
7. Burners can be operated above the rated static air inlet pressure; consult Hauck.

In accordance with Hauck's commitment to Total Quality Improvement, Hauck reserves the right to change the specifications of products without prior notice.

HAUCK MANUFACTURING CO., P.O. Box 90 Lebanon, PA 17042-0090 717-272-3051
Fax: 717-273-9882

SVG SUPER VERSATILE GAS BURNER

BURNER MODEL SVG 115 / 215

	TILE DESIGNATION						
	HR	**HS**	**HC**	**HA**	**MR**	**MS**	**MA**
	High Velocity Round	High Velocity Square	High Velocity Ceramic	High Velocity Alloy	Medium Velocity Round	Medium Velocity Square	Medium Velocity Alloy
BURNER SPECIFICATIONS – HIGH FIRE							
Burner Static Inlet Air Pressure for 115 / 215 (osig)	16	16	16	16	16	16	16
	8	8	8	6.2	8	8	8
Max. Input @ 10% Excess Air (10^3 Btu/hr)	**410**	**410**	**410**	**385**	**415**	**415**	**410**
Max. Air Flow for 115 / 215 (scfh)	4,240	4,240	4,240	4,015	4,280	4,280	4,250
Min. Input @ Max. Air Flow (10^3 Btu/hr)	11.0	11.0	11.0	12.2	13.8	13.8	11.6
Max. Excess Air (%)	4,000	4,000	4,000	3,400	3,200	3,200	3,800
Air Orifice ΔP for 115 / 215 ("wc)	16.3	16.3	16.3	18.6	23.3	23.3	22.9
	3.2	3.2	3.2	3.3	4.6	4.6	4.5
Gas Inlet Pressure ("wc)	11.5	11.5	11.5	7.6	4.1	4.1	4.2
Flame Length @ Max. Input (in)	24	24	24	14	24	24	14
Flame Diameter @ Max. Input (in)	3	3	3	3	4	4	4
BURNER SPECIFICATIONS - LOW FIRE	**BURNER STATIC INLET AIR PRESSURE OF 0.17 OSIG (115) / 0.10 OSIG (215)**						
Input @ 10% Excess Air (10^3 Btu/hr)	**34.0**	**34.0**	**34.0**	**36.0**	**40.0**	**40.0**	**44.0**
Air Flow for 115 / 215 (scfh)	350	350	350	370	415	415	450
Min. Input @ Air Flow (10^3 Btu/hr)	3.9	3.9	3.9	3.8	4.4	4.4	8.0
Max. Excess Air (%)	850	850	850	1,000	900	900	500

NOTES:

1. Capacities based on natural gas with HHV of 1034 Btu/ft^3, 0.59 S.G., and an stoichiometric air:gas ratio of 9.74:1 with burner firing into chamber under no pressure @ 10% excess air. For **CP** model capacities, refer to data as listed under the appropriate HR, HS, MR or MS tile designations.
2. Air and gas flows based on 60°F @ sea level.
3. Static air pressure measured at the burner air inlet pressure tap.
4. Flame lengths measured from the end of the burner tile.
5. All data based on industry standard air and gas piping practices.
6. Flame detection available via UV scanner or flame rod.
7. Burners can be operated above the rated static inlet air pressure; consult Hauck.

(See Reverse Side for Metric Data)

In accordance with Hauck's commitment to Total Quality Improvement, Hauck reserves the right to change the specifications of products without prior notice.

HAUCK MANUFACTURING CO., P.O. Box 90 Lebanon, PA 17042-0090 717-272-3051
www.hauckburner.com Fax: 717-273-9882

SVG SUPER VERSATILE GAS BURNER
BURNER MODEL SVG-E15

		TILE DESIGNATION						
		HR	**HS**	**HC**	**HA**	**MR**	**MS**	**MA**
		High Velocity Round	High Velocity Square	High Velocity Ceramic	High Velocity Alloy	Medium Velocity Round	Medium Velocity Square	Medium Velocity Alloy
BURNER SPECIFICATIONS – HIGH FIRE								
Burner Static Inlet Air Pressure E15	(Pa)	3,450	3,450	3,450	3,450	3,450	3,450	3,450
Max. Input @ 10% Excess Air	**(kW)**	**108**	**108**	**108**	**116**	**110**	**110**	**108**
Max. Air Flow @ 3,450 Pa	(nm^3/hr)	114	114	114	122	115	115	114
Min. Input @ Max. Air Flow	(kW)	2.9	2.9	2.9	3.2	3.7	3.7	3.1
Max. Excess Air	(%)	4,000	4,000	4,000	3,400	3,200	3,200	3,800
Air Orifice ΔP	(Pa)	800	800	800	1,070	1,150	1,150	1,120
Gas Inlet Pressure	(Pa)	2,860	2,860	2,860	2,460	1,020	1,020	1,050
Flame Length @ Max. Input	(mm)	610	610	610	355	610	610	355
Flame Diameter @ Max. Input	(mm)	75	75	75	75	100	100	100
BURNER SPECIFICATIONS - LOW FIRE		**BURNER STATIC INLET AIR PRESSURE OF 45 Pa**						
Input @ 10% Excess Air	**(kW)**	**9.0**	**9.0**	**9.0**	**9.5**	**10.6**	**10.6**	**11.6**
Air Flow @ 45 Pa	(nm^3/hr)	9.5	9.5	9.5	**9.9**	11.1	11.1	12.1
Min. Input @ Air Flow	(kW)	1.0	1.0	1.0	1.0	1.2	1.2	2.1
Max. Excess Air	(%)	850	850	850	1,000	900	900	500

NOTES:

1. Capacities based on natural gas with LHV of 36.74 MJ/nm^3, 0.59 S.G., and an stoichiometric air:gas ratio of 9.74:1 with burner firing into chamber under no pressure @ 10% excess air. For **CP** model capacities, refer to data as listed under the appropriate HR, HS, MR or MS tile designation.
2. Air and gas flows based on 0°C @ sea level.
3. Static air pressures measured at the burner air inlet pressure tap.
4. Flame lengths measured from the end of the burner tile.
5. All data based on industry standard air and gas piping practices.
6. Flame detection available via UV scanner or flame rod.
7. Burners can be operated above the rated static air inlet pressure; consult Hauck.

In accordance with Hauck's commitment to Total Quality Improvement, Hauck reserves the right to change the specifications of products without prior notice.

HAUCK MANUFACTURING CO., P.O. Box 90 Lebanon, PA 17042-0090 717-272-3051
Fax: 717-273-9882

SVG SUPER VERSATILE GAS BURNER

BURNER MODEL SVG 120 / 220

	TILE DESIGNATION							
	HR	**HS**	**HT**	**HC**	**HA**	**MR**	**MS**	**MA**
	High Velocity Round	High Velocity Square	High Velocity Hauck Tail	High Velocity Ceramic	High Velocity Alloy	Medium Velocity Round	Medium Velocity Square	Medium Velocity Alloy
BURNER SPECIFICATIONS – HIGH FIRE								
Burner Static Inlet Air pressure for 120 / 220 (osig)	16	16	16	16	16	16	16	16
	8	8	8	8	8	8	8	8
Max. Input @ 10% Excess Air (10^3 Btu/hr)	**700**	**700**	**700**	**700**	**735**	**750**	**750**	**735**
Max. Air Flow for 120 / 220 (scfh)	7,250	7,250	7,250	7,250	7,600	7,750	7,750	7,600
Min. Input @ Max. Air Flow (10^3 Btu/hr)	18.8	18.8	18.8	18.8	14.0	17.0	17.0	38.0
Max. Excess Air (%)	4,000	4,000	4,000	4,000	5,200	4,800	4,800	2,000
Air Orifice □P for 120 / 220 ("wc)	18.2	18.2	18.2	18.2	18.6	24.2	24.2	22.5
	4.8	4.8	4.8	4.8	4.7	6.4	6.4	5.8
Gas Inlet Pressure ("wc)	7.8	7.8	7.8	7.8	7.1	3.3	3.3	4.0
Flame Length @ Max. Input (in)	25	25	25	25	25	32	32	20
Flame Diameter @ Max. Input (in)	6	6	6	6	6	6	6	5
BURNER SPECIFICATIONS - LOW FIRE	**BURNER STATIC INLET AIR PRESSURE OF 0.17 OSIG (120) / 0.10 OSIG (220)**							
Input @ 10% Excess Air (10^3 Btu/hr)	**67.5**	**67.5**	**67.5**	**67.5**	**76.5**	**80.1**	**80.1**	**86.9**
Air Flow for 120 / 220 (scfh)	700	700	700	700	800	830	830	900
Min. Input @ Air Flow (10^3 Btu/hr)	6.8	6.8	6.8	6.8	7.5	8.0	8.0	8.7
Max. Excess Air (%)	1,000	1,000	1,000	1,000	1,000	1,000	1,000	1,000

NOTES:

1. Capacities based on natural gas with HHV of 1034 Btu/ft^3, 0.59 S.G., and an stoichiometric air:gas ratio of 9.74:1 with burner firing into chamber under no pressure @ 10% excess air. For **CP** model capacities, refer to data as listed under the appropriate HR, HS, MR or MS tile designation.
2. Air and gas flows based on 60°F @ sea level.
3. Static air pressure measured at the burner air inlet pressure tap.
4. Flame lengths measured from the end of the burner tile.
5. All data based on industry standard air and gas piping practices.
6. Flame detection available via UV scanner or flame rod.
7. Burners can be operated above the rated static inlet air pressure; consult Hauck.

(See Reverses Side for Metric Data)

In accordance with Hauck's commitment to Total Quality Improvement, Hauck reserves the right to change the specifications of products without prior notice.

HAUCK MANUFACTURING CO., P.O. Box 90 Lebanon, PA 17042-0090 717-272-3051
www.hauckburner.com Fax: 717-273-9882

SVG SUPER VERSATILE GAS BURNER

BURNER MODEL SVG-E20

		TILE DESIGNATION							
		HR	**HS**	**HT**	**HC**	**HA**	**MR**	**MS**	**MA**
		High Velocity Round	High Velocity Square	High Velocity Hauck Tail	High Velocity Ceramic	High Velocity Alloy	Medium Velocity Round	Medium Velocity Square	Medium Velocity Alloy
BURNER SPECIFICATIONS – HIGH FIRE									
Burner Static Inlet Air Pressure E20	(Pa)	3,450	3,450	3,450	3,450	3,450	3,450	3,450	3,450
Max. Input @ 10% Excess Air	**(kW)**	**185**	**185**	**185**	**185**	**195**	**198**	**198**	**194**
Max. Air Flow @ 3,450 Pa	(nm^3/hr)	195	195	195	195	203	208	208	204
Min. Input @ Max. Air Flow	(kW)	5.0	5.0	5.0	5.0	3.7	4.5	4.5	10.0
Max. Excess Air	(%)	4,000	4,000	4,000	4,000	5,200	4,800	4,800	2,000
Air Orifice □P	(Pa)	1,195	1,195	1,195	1,195	1,170	1,595	1,595	1,445
Gas Inlet Pressure	(Pa)	1,940	1,940	1,940	1,940	1,770	820	820	995
Flame Length @ Max. Input	(mm)	635	635	635	635	635	815	815	510
Flame Diameter @ Max. Input	(mm)	150	150	150	150	150	150	150	125
BURNER SPECIFICATIONS - LOW FIRE		**BURNER STATIC INLET AIR PRESSURE OF 45 Pa**							
Input @ 10% Excess Air	**(kW)**	**18.0**	**18.0**	**18.0**	**18.0**	**20.4**	**21.2**	**21.2**	**23.2**
Air Flow @ 45 Pa	(nm^3/hr)	18.9	18.9	18.9	18.9	21.4	22.2	22.2	24.3
Min. Input @ Air Flow	(kW)	1.8	1.8	1.8	1.8	2.0	2.1	2.1	2.3
Max. Excess Air	(%)	1,000	1,000	1,000	1,000	1,000	1,000	1,000	1,000

NOTES:

1. Capacities based on natural gas with LHV of 36.74 MJ/nm^3, 0.59 S.G., and an stoichiometric air:gas ratio of 9.74:1 with burner firing into chamber under no pressure @ 10% excess air. For **CP** model capacities, refer to data as listed under the appropriate HR, HS, MR or MS tile designation.
2. Air and gas flows based on 0°C @ sea level.
3. Static air pressures measured at the burner air inlet pressure tap.
4. Flame lengths measured from the end of the burner tile.
5. All data based on industry standard air and gas piping practices.
6. Flame detection available via UV scanner or flame rod.
7. Burners can be operated above the rated static air inlet pressure; consult Hauck.

In accordance with Hauck's commitment to Total Quality Improvement, Hauck reserves the right to change the specifications of products without prior notice.

HAUCK MANUFACTURING CO., P.O. Box 90 Lebanon, PA 17042-0090 717-272-3051
Fax: 717-273-9882

SVG SUPER VERSATILE GAS BURNER

BURNER MODEL SVG 125 / 225

	TILE DESIGNATION							
	HR	**HS**	**HT**	**HC**	**HA**	**MR**	**MS**	**MA**
	High Velocity Round	High Velocity Square	High Velocity Hauck Tail	High Velocity Ceramic	High Velocity Alloy	Medium Velocity Round	Medium Velocity Square	Medium Velocity Alloy
BURNER SPECIFICATIONS – HIGH FIRE								
Burner Static Inlet Air Pressure for 125 / 225 (osig)	16	16	16	16	16	16	16	16
	8	8	8	8	8	8	8	8
Max. Input @ 10% Excess Air (10^3 Btu/hr)	**1,000**	**1,000**	**1,000**	**1,000**	**1,000**	**1,200**	**1,200**	**1,240**
Max. Air Flow for 125 / 225 (scfh)	10,600	10,600	10,600	10,600	10,600	12,500	12,500	12,900
Min. Input @ Max. Air Flow (10^3 Btu/hr)	15.9	15.9	15.9	15.9	15.9	19.5	19.5	14.4
Max. Excess Air (%)	7,000	7,000	7,000	7,000	7,000	6,700	6,700	9,400
Air Orifice ΔP for 125 / 225 ("wc)	15.3	15.3	15.3	15.3	14.6	21.1	21.1	20.5
	2.5	2.5	2.5	2.5	2.5	3.4	3.4	3.3
Gas Inlet Pressure ("wc)	10.5	10.5	10.5	10.5	12.0	3.5	3.5	4.3
Flame Length @ Max. Input (in)	36	36	36	36	22	40	40	24
Flame Diameter @ Max. Input (in)	6	6	6	6	6	6	6	5
BURNER SPECIFICATIONS - LOW FIRE	**BURNER STATIC INLET AIR PRESSURE OF 0.17 OSIG (125) / 0.10 OSIG (225)**							
Input @ 10% Excess Air (10^3 Btu/hr)	**86.9**	**86.9**	**86.9**	**86.9**	**97.2**	**133**	**133**	**153**
Air Flow for 125 / 225 (scfh)	900	900	900	900	1,060	1,380	1,380	1,580
Min. Input @ Air Flow (10^3 Btu/hr)	5.0	5.0	5.0	5.0	8.4	6.7	6.7	8.4
Max. Excess Air (%)	1,800	1,800	1,800	1,800	1,200	2,100	2,100	1,900

NOTES:

1. Capacities based on natural gas with HHV of 1034 Btu/ft^3, 0.59 S.G., and an stoichiometric air:gas ratio of 9.74:1 with burner firing into chamber under no pressure @ 10% excess air. For **CP** model capacities, refer to data as listed under the appropriate HR, HS, MR or MS tile designation.
2. Air and gas flows based on 60°F @ sea level.
3. Static air pressure measured at the burner air inlet pressure tap.
4. Flame lengths measured from the end of the burner tile.
5. All data based on industry standard air and gas piping practices.
6. Flame detection available via UV scanner or flame rod.
7. Burners can be operated above the rated static inlet air pressure; consult Hauck.

(See Reverses Side for Metric Data)

In accordance with Hauck's commitment to Total Quality Improvement, Hauck reserves the right to change the specifications of products without prior notice.

HAUCK MANUFACTURING CO., P.O. Box 90 Lebanon, PA 17042-0090 717-272-3051
www.hauckburner.com Fax: 717-273-9882

SVG SUPER VERSATILE GAS BURNER
BURNER MODEL SVG-E25

		TILE DESIGNATION							
		HR	**HS**	**HT**	**HC**	**HA**	**MR**	**MS**	**MA**
		High Velocity Round	High Velocity Square	High Velocity Hauck Tail	High Velocity Ceramic	High Velocity Alloy	Medium Velocity Round	Medium Velocity Square	Medium Velocity Alloy
BURNER SPECIFICATIONS – HIGH FIRE									
Burner Static Inlet Air Pressure E25	(Pa)	3,450	3,450	3,450	3,450	3,450	3,450	3,450	3,450
Max. Input @ 10% Excess Air	**(kW)**	**265**	**265**	**265**	**265**	**265**	**317**	**317**	**328**
Max. Air Flow @ 3,450 Pa	(nm^3/hr)	284	284	284	284	284	335	335	344
Min. Input @ Max. Air Flow	(kW)	4.2	4.2	4.2	4.2	4.2	5.2	5.2	3.8
Max. Excess Air	(%)	7,000	7,000	7,000	7,000	7,000	6,700	6,700	9,400
Air Orifice ΔP	(Pa)	625	625	625	625	625	845	845	820
Gas Inlet Pressure	(Pa)	2,610	2,610	2,610	2,610	3,000	870	870	1,070
Flame Length @ Max. Input	(mm)	915	915	915	915	560	1,020	1,020	610
Flame Diameter @ Max. Input	(mm)	150	150	150	150	150	150	150	125
BURNER SPECIFICATIONS - LOW FIRE		**BURNER STATIC INLET AIR PRESSURE OF 45 Pa**							
Input @ 10% Excess Air	**(kW)**	**23**	**23**	**23**	**23**	**25.7**	**35.2**	**35.2**	**40.7**
Air Flow @ 45 Pa	(nm^3/hr)	27.0	27.0	27.0	27.0	28.4	37.0	37.0	42.7
Min. Input @ Air Flow	(kW)	1.5	1.5	1.5	1.5	2.2	1.8	1.8	2.2
Max. Excess Air	(%)	1,800	1,800	1,800	1,800	1,200	2,100	2,100	1,900

NOTES:

1. Capacities based on natural gas with LHV of 36.74 MJ/nm^3, 0.59 S.G., and an stoichiometric air:gas ratio of 9.74:1 with burner firing into chamber under no pressure @ 10% excess air. For **CP** model capacities, refer to data as listed under the appropriate HR, HS, MR or MS tile designation.
2. Air and gas flows based on 0°C @ sea level.
3. Static air pressures measured at the burner air inlet pressure tap.
4. Flame lengths measured from the end of the burner tile.
5. All data based on industry standard air and gas piping practices.
6. Flame detection available via UV scanner or flame rod.
7. Burners can be operated above the rated static air inlet pressure; consult Hauck.

In accordance with Hauck's commitment to Total Quality Improvement, Hauck reserves the right to change the specifications of products without prior notice.

HAUCK MANUFACTURING CO., P.O. Box 90 Lebanon, PA 17042-0090 717-272-3051
Fax: 717-273-9882

SVG SUPER VERSATILE GAS BURNER

BURNER MODEL SVG 130 / 230

	TILE DESIGNATION							
	HR	**HS**	**HT**	**HC**	**HA**	**MR**	**MS**	**MA**
	High Velocity Round	High Velocity Square	High Velocity Hauck Tail	High Velocity Ceramic	High Velocity Alloy	Medium Velocity Round	Medium Velocity Square	Medium Velocity Alloy
BURNER SPECIFICATIONS – HIGH FIRE								
Burner Static Inlet Air Pressure for 130 / 230 (osig)	16	16	16	16	16	16	16	16
	8	8	8	8	8	8	8	8
Max. Input @ 10% Excess Air (10^3 Btu/hr)	**1,300**	**1,300**	**1,300**	**1,300**	**1,250**	**1,500**	**1,500**	**1,510**
Max. Air Flow for 130 / 230 (scfh)	13,400	13,400	13,400	13,400	12,900	15,500	15,500	15,600
Min. Input @ Max. Air Flow (10^3 Btu/hr)	15.7	15.7	15.7	15.7	17.5	23.2	23.2	25.5
Max. Excess Air (%)	9,000	9,000	9,000	9,000	7,500	7,000	7,000	6,400
Air Orifice ΔP for 130 / 230 ("wc)	20.5	20.5	20.5	20.5	15.3	22.8	22.8	21.8
	6.0	6.0	6.0	6.0	3.3	6.7	6.7	6.4
Gas Inlet Pressure ("wc)	8.3	8.3	8.3	8.3	10.8	2.5	2.5	3.5
Flame Length @ Max. Input (in)	48	48	48	48	27	54	54	30
Flame Diameter @ Max. Input (in)	7	7	7	7	7	8	8	6
BURNER SPECIFICATIONS - LOW FIRE	**BURNER STATIC INLET AIR PRESSURE OF 0.17 OSIG (130) / 0.10 OSIG (230)**							
Input @ 10% Excess Air (10^3 Btu/hr)	**125**	**125**	**125**	**125**	**125**	**154**	**154**	**241**
Air Flow for 130 / 230 (scfh)	1,300	1,300	1,300	1,300	1,300	1,600	1,600	2,500
Min. Input @ Air Flow (10^3 Btu/hr)	8.6	8.6	8.6	8.6	8.6	6.5	6.5	8.6
Max. Excess Air (%)	1,500	1,500	1,500	1,500	1,500	2,500	2,500	3,000

NOTES:

1. Capacities based on natural gas with HHV of 1034 Btu/ft^3, 0.59 S.G., and an stoichiometric air:gas ratio of 9.74:1 with burner firing into chamber under no pressure @ 10% excess air. For **CP** model capacities, refer to data as listed under the appropriate HR, HS, MR or MS tile designation.
2. Air and gas flows based on 60°F @ sea level.
3. Static air pressure measured at the burner air inlet pressure tap.
4. Flame lengths measured from the end of the burner tile.
5. All data based on industry standard air and gas piping practices.
6. Flame detection available via UV scanner or flame rod.
7. Burners can be operated above the rated static inlet air pressure; consult Hauck. (See Reverses Side for Metric Data)

In accordance with Hauck's commitment to Total Quality Improvement, Hauck reserves the right to change the specifications of products without prior notice.

HAUCK MANUFACTURING CO., P.O. Box 90 Lebanon, PA 17042-0090 717-272-3051
www.hauckburner.com Fax: 717-273-9882

SVG SUPER VERSATILE GAS BURNER

BURNER MODEL SVG-E30

		TILE DESIGNATION							
		HR	**HS**	**HT**	**HC**	**HA**	**MR**	**MS**	**MA**
		High Velocity Round	High Velocity Square	High Velocity Hauck Tail	High Velocity Ceramic	High Velocity Alloy	Medium Velocity Round	Medium Velocity Square	Medium Velocity Alloy
BURNER SPECIFICATIONS – HIGH FIRE									
Burner Static Inlet Air Pressure E30	(Pa)	3,450	3,450	3,450	3,450	3,450	3,450	3,450	3,450
Max. Input @ 10% Excess Air	**(kW)**	**343**	**343**	**343**	**343**	**330**	**395**	**395**	**400**
Max. Air Flow @ 3,450 Pa	(nm^3/hr)	360	360	360	360	346	415	415	419
Min. Input @ Max. Air Flow	(kW)	4.1	4.1	4.1	4.1	4.6	6.1	6.1	6.8
Max. Excess Air	(%)	9,000	9,000	9,000	9,000	7,500	7,000	7,000	6,4000
Air Orifice ΔP	(Pa)	1,490	1,490	1,490	1,490	820	1,665	1,665	1,590
Gas Inlet Pressure	(Pa)	2,070	2,070	2,070	2,070	2,690	620	620	870
Flame Length @ Max. Input	(mm)	1,220	1,220	1,220	1,220	1,120	1,370	1,370	760
Flame Diameter @ Max. Input	(mm)	175	175	175	175	175	200	200	150
BURNER SPECIFICATIONS - LOW FIRE		**BURNER STATIC INLET AIR PRESSURE OF 45 Pa**							
Input @ 10% Excess Air	**(kW)**	**33.5**	**33.5**	**33.5**	**33.5**	**125**	**40.8**	**40.8**	**64.4**
Air Flow @ 45 Pa	(nm^3/hr)	35.2	35.2	35.2	35.2	35.2	42.9	42.9	67.6
Min. Input @ Air Flow	(kW)	2.3	2.3	2.3	2.3	2.3	1.7	1.7	2.3
Max. Excess Air	(%)	1,500	1,500	1,500	1,500	1,500	2,500	2,500	3,000

NOTES:

1. Capacities based on natural gas with LHV of 36.74 MJ/nm^3, 0.59 S.G., and an stoichiometric air:gas ratio of 9.74:1 with burner firing into chamber under no pressure @ 10% excess air. For **CP** model capacities, refer to data as listed under the appropriate HR, HS, MR or MS tile designation.
2. Air and gas flows based on 0°C @ sea level.
3. Static air pressures measured at the burner air inlet pressure tap.
4. Flame lengths measured from the end of the burner tile.
5. All data based on industry standard air and gas piping practices.
6. Flame detection available via UV scanner or flame rod.
7. Burners can be operated above the rated static air inlet pressure; consult Hauck.

In accordance with Hauck's commitment to Total Quality Improvement, Hauck reserves the right to change the specifications of products without prior notice.

HAUCK MANUFACTURING CO., P.O. Box 90 Lebanon, PA 17042-0090 717-272-3051
Fax: 717-273-9882

SVG SUPER VERSATILE GAS BURNER

BURNER MODEL SVG 135 / 235

		TILE DESIGNATION		
		HR	HS	HT
		High Velocity Round	High Velocity Square	High Velocity Hauck Tail
BURNER SPECIFICATIONS – HIGH FIRE				
Burner Static Inlet Air Pressure for 135 / 235	(osig)	16 8	16 8	16 8
Max Input @10% Excess Air	**(10^3 Btu/hr)**	**1,610**	**1,610**	**1,610**
Max Air Flow @16 OSIG	(scfh)	16,675	16,675	16,675
Min Input @ Max Air Flow	(10^3 Btu/hr)	17.5	17.5	17.5
Max Excess Air	(%)	10,000	10,000	10,000
Air Orifice ΔP for 135 / 235	("wc)	22.7 6.3	22.7 6.3	22.7 6.3
Gas Inlet Pressure	("wc)	6.6	6.6	6.6
Flame Length @ Max Input	(in)	60	60	60
Flame Diameter @ Max Input	(in)	10	10	10
BURNER SPECIFICATIONS – LOW FIRE		**STATIC INLET AIR PRESSURE OF 0.17 OSIG**		
Input @ 10% Excess Air	(10^3 Btu/hr)	**180**	**180**	**180**
Air Flow @ 0.17 OSIG	(scfh)	1,850	1,850	1,850
Min Input @ Air Flow	(10^3 Btu/hr)	7.5	7.5	7.5
Max Excess Air	(%)	2,500	2,500	2,500

NOTES:

1. Capacities based on natural gas with HHV of 1034 Btu/ft^3, 0.59 S.G., and an stoichiometric air:gas ratio of 9.74:1 with burner firing into chamber under no pressure @ 10% excess air. For **CP** model capacities, refer to data as listed under the appropriate HR, HS, MR or MS tile designation.
2. Air and gas flows based on 60°F @ sea level.
3. Static air pressure measured at the burner air inlet pressure tap.
4. Flame lengths measured from the end of the burner tile.
5. All data based on industry standard air and gas piping practices.
6. Flame detection available via UV scanner or flame rod.
7. Burners can be operated above the rated static inlet air pressure; consult Hauck.

(See Reverse Side for Metric Data)

In accordance with Hauck's commitment to Total Quality Improvement, Hauck reserves the right to change the specifications of products without prior notice.

HAUCK MANUFACTURING CO., P.O. Box 90 Lebanon, PA 17042-0090 717-272-3051
www.hauckburner.com Fax: 717-273-9882

SVG SUPER VERSATILE GAS BURNER
BURNER MODEL SVG-E35

		TILE DESIGNATION		
		HR	HS	HT
		High Velocity Round	High Velocity Square	High Velocity Hauck Tail
BURNER SPECIFICATIONS – HIGH FIRE				
Burner Static Inlet Air Pressure E35	(Pa)	3,450	3,450	3,450
Max Input @10% Excess Air	**(kW)**	**425**	**425**	**425**
Max Air Flow @ 3,450 Pa	(nm^3/hr)	447	447	447
Min Input @ Max Air Flow	(kW)	4.6	4.6	4.6
Max Excess Air	(%)	10,000	10,000	10,000
Air Orifice ΔP	(Pa)	1,567	1,567	1,567
Gas Inlet Pressure	(Pa)	1,642	1,642	1,642
Flame Length @ Max Input	(mm)	1,530	1,530	1,530
Flame Diameter @ Max Input	(mm)	250	250	250
BURNER SPECIFICATIONS – LOW FIRE		**STATIC INLET AIR PRESSURE OF 45 Pa**		
Input @ 10% Excess Air	**(kW)**	**47**	**47**	**47**
Air Flow @ 45 Pa	(nm^3/hr)	50	50	50
Min Input @ Air Flow	(kW)	2.0	2.0	2.0
Max Excess Air	(%)	2,500	2,500	2,500

NOTES:

1. Capacities based on natural gas with LHV of 36.74 MJ/nm^3, 0.59 S.G., and an stoichiometric air:gas ratio of 9.74:1 with burner firing into chamber under no pressure @ 10% excess air. For **CP** model capacities, refer to data as listed under the appropriate HR, HS, MR or MS tile designation.
2. Air and gas flows based on 0°C @ sea level.
3. Static air pressure measured at the burner air inlet pressure tap.
4. Flame lengths measured from the end of the burner tile.
5. All data based on industry standard air and gas piping practices.
6. Flame detection available via UV scanner or flame rod.
7. Burners can be operated above the rated static inlet air pressure; consult Hauck.

In accordance with Hauck's commitment to Total Quality Improvement, Hauck reserves the right to change the specifications of products without prior notice.

HAUCK MANUFACTURING CO., P.O. Box 90 Lebanon, PA 17042-0090 717-272-3051
Fax: 717-273-9882

SVG SUPER VERSATILE GAS BURNER

BURNER MODEL SVG_40C

	TILE DESIGNATION							
	HR	HS	HT	HC	HA	MR	MS	MA
	High Velocity Round	High Velocity Square	High Velocity Hauck Tail	High Velocity Ceramic	High Velocity Alloy	Medium Velocity Round	Medium Velocity Square	Medium Velocity Alloy
BURNER SPECIFICATIONS – HIGH FIRE								
Burner Static Inlet Air Pressure for 140 / 240 (osig)	16	16	16	16	16	16	16	16
	8	8	8	8	8	8	8	8
Max. Input @ 10% Excess Air (10^3 Btu/hr)	**2,100**	**2,100**	**2,100**	**2,100**	**2,005**	**2,350**	**2,350**	**2,320**
Max. Air Flow for 140 / 240 (scfh)	21,760	21,760	21,760	21,760	20,775	24,350	24,350	24,035
Min. Input @ Max. Air Flow (10^3 Btu/hr)	28.5	28.5	28.5	28.5	29.0	25.6	25.6	25.3
Max. Excess Air (%)	8,000	8,000	8,000	8,000	7,500	10,000	10,000	10,000
Air Orifice ΔP for 140 / 240 ("wc)	19.4	19.4	19.4	19.4	18.5	21.3	21.3	23.9
	3.8	3.8	3.8	3.8	4.3	6.4	6.4	6.1
Gas Inlet Pressure ("wc)	8.4	8.4	8.4	8.4	8.5	9.1	9.1	10.4
Flame Length @ Max. Input (in)	60	60	60	60	48	66	66	48
Flame Diameter @ Max. Input (in)	12	12	12	12	12	16	16	12
BURNER SPECIFICATIONS - LOW FIRE	**BURNER STATIC INLET AIR PRESSURE OF 0.17 OSIG (120) / 0.10 OSIG (220)**							
Input @ 10% Excess Air (10^3 Btu/hr)	**245**	**245**	**245**	**245**	**235**	**280**	**280**	**275**
Air Flow for 140 / 240 (scfh)	2,540	2,540	2,540	2,540	2,430	2,905	2,905	2,850
Min. Input @ Air Flow (10^3 Btu/hr)	8.7	8.7	8.7	8.7	8.7	10.0	10.0	9.8
Max. Excess Air (%)	3,000	3,000	3,000	3,000	2,850	3,000	3,000	3,000

NOTES:

1. Capacities based on natural gas with HHV of 1034 Btu/ft^3, 0.59 S.G., and an stoichiometric air:gas ratio of 9.74:1 with burner firing into chamber under no pressure @ 10% excess air. For **CP** model capacities, refer to data as listed under the appropriate HR, HS, MR or MS tile designation.
2. Air and gas flows based on 60°F @ sea level.
3. Static air pressure measured at the burner air inlet pressure tap.
4. Flame lengths measured from the end of the burner tile.
5. All data based on industry standard air and gas piping practices.
6. Flame detection available via UV scanner or flame rod.
7. Burners can be operated above the rated static inlet air pressure; consult Hauck. (See Reverse Side for Metric Data)

In accordance with Hauck's commitment to Total Quality Improvement, Hauck reserves the right to change the specifications of products without prior notice.

METRIC DATA

SVG SUPER VERSATILE GAS BURNER

BURNER MODEL SVG_40C

		TILE DESIGNATION							
		HR	HS	HT	HC	HA	MR	MS	MA
		High Velocity Round	High Velocity Square	High Velocity Hauck Tail	High Velocity Ceramic	High Velocity Alloy	Medium Velocity Round	Medium Velocity Square	Medium Velocity Alloy
BURNER SPECIFICATIONS – HIGH FIRE									
Burner Static Inlet Air Pressure E40	(Pa)	3,450	3,450	3,450	3,450	3,450	3,450	3,450	3,450
Max. Input @ 10% Excess Air	**(kW)**	**554**	**554**	**554**	**554**	**529**	**620**	**620**	**612**
Max. Air Flow @ 3,450 Pa	(nm^3/hr)	583	583	583	583	557	652	652	644
Min. Input @ Max. Air Flow	(kW)	7.5	7.5	7.5	7.5	7.7	6.8	6.8	6.7
Max. Excess Air	(%)	8,000	8,000	8,000	8,000	7,500	10,000	10,000	10,000
Air Orifice ΔP	(Pa)	945	945	945	945	1,070	1,590	1,590	1,515
Gas Inlet Pressure	(Pa)	2,090	2,090	2,090	2,090	2,115	2,260	2,260	2,590
Flame Length @ Max. Input	(mm)	1525	1525	1525	1525	1220	1675	1675	1220
Flame Diameter @ Max. Input	(mm)	305	305	305	305	305	405	405	305
BURNER SPECIFICATIONS - LOW FIRE		**BURNER STATIC INLET AIR PRESSURE OF 45 Pa**							
Input @ 10% Excess Air	**(kW)**	**65**	**65**	**65**	**65**	**62**	**74**	**74**	**73**
Air Flow @ 45 Pa	(nm^3/hr)	68	68	68	68	65	78	78	76
Min. Input @ Air Flow	(kW)	2.3	2.3	2.3	2.3	2.3	2.6	2.6	2.6
Max. Excess Air	(%)	3,000	3,000	3,000	3,000	2,850	3,000	3,000	3,000

NOTES:

1. Capacities based on natural gas with LHV of 36.74 MJ/nm^3, 0.59 S.G., and an stoichiometric air:gas ratio of 9.74:1 with burner firing into chamber under no pressure @ 10% excess air. For **CP** model capacities, refer to data as listed under the appropriate HR, HS, MR or MS tile designation.
2. Air and gas flows based on 0°C @ sea level.
3. Static air pressures measured at the burner air inlet pressure tap.
4. Flame lengths measured from the end of the burner tile.
5. All data based on industry standard air and gas piping practices.
6. Flame detection available via UV scanner or flame rod.
7. Burners can be operated above the rated static air inlet pressure; consult Hauck.

In accordance with Hauck's commitment to Total Quality Improvement, Hauck reserves the right to change the specifications of products without prior notice.

HAUCK MANUFACTURING CO., P.O. Box 90 Lebanon, PA 17042-0090 717-272-3051
Fax: 717-273-9882

SVG SUPER VERSATILE GAS BURNER

BURNER MODEL SVG_60C

		TILE DESIGNATION				
		HR	HC	HA	MR	MA
		High Velocity Round	High Velocity Ceramic	High Velocity Alloy	Medium Velocity Round	Medium Velocity Alloy
BURNER SPECIFICATIONS – HIGH FIRE						
Burner Static Inlet Air Pressure for 160 / 260 (osig)		16	16	16	16	16
		8	8	10.2	8	8
Max. Input @ 10% Excess Air for 160 / 260	**(10^3 Btu/hr)**	**4,700**	**4,700**	**4,295**	**5,520**	**4,980**
Max. Air Flow for 160 / 260	(scfh)	48,700	48,700	44,500	57,200	51,600
Min. Input @ Max. Air Flow	(10^3 Btu/hr)	78.3	78.3	71.5	89.0	90
Max. Excess Air	(%)	6,500	6,500	6,500	6,500	6,000
Air Orifice ΔP for 160 / 260	("wc)	16.0	16.0	14.5	20.7	19.0
		3.0	3.0	4.6	6.7	5.9
Gas Inlet Pressure for 160 / 260	("wc)	12.4	12.4	13.5	7.9	9.2
Flame Length @ Max. Input	(in)	84	84	60	96	72
Flame Diameter @ Max. Input	(in)	26	26	18	28	24
BURNER SPECIFICATIONS - LOW FIRE		**BURNER STATIC INLET AIR PRESSURE OF 0.17 OSIG (160) / 0.10 OSIG (260)**				
Input @ 10% Excess Air	**(10^3 Btu/hr)**	**550**	**550**	**500**	**575**	**510**
Air Flow for 160 / 260	(scfh)	5,700	5,700	5,180	5,955	5,280
Min. Input @ Air Flow	(10^3 Btu/hr)	23.3	23.3	21.2	23.5	21.6
Max. Excess Air	(%)	2,500	2,500	2,500	2,500	2,500

NOTES:

1. Capacities based on natural gas with HHV of 1034 Btu/ft^3, 0.59 S.G., and an stoichiometric air:gas ratio of 9.74:1 with burner firing into chamber under no pressure @ 10% excess air. For **CP** model capacities, refer to data as listed under the appropriate HR, HS, MR or MS tile designation.
2. Air and gas flows based on 60°F @ sea level.
3. Static air pressure measured at the burner air inlet pressure tap.
4. Flame lengths measured from the end of the burner tile.
5. All data based on industry standard air and gas piping practices.
6. Flame detection available via UV scanner or flame rod.
7. Burners can be operated above the rated static inlet air pressure; consult Hauck.

(See Reverse Side for Metric Data)

In accordance with Hauck's commitment to Total Quality Improvement, Hauck reserves the right to change the specifications of products without prior notice.

HAUCK MANUFACTURING CO., P.O. Box 90 Lebanon, PA 17042-0090 717-272-3051
www.hauckburner.com Fax: 717-273-9882

SVG SUPER VERSATILE GAS BURNER
BURNER MODEL SVG-E60C

		TILE DESIGNATION				
		HR	**HC**	**HA**	**MR**	**MA**
		High Velocity Round	High Velocity Ceramic	High Velocity Alloy	Medium Velocity Round	Medium Velocity Alloy
BURNER SPECIFICATIONS – HIGH FIRE						
Burner Static Inlet Air Pressure E60	(Pa)	3,450	3,450	4,375	3,450	3,450
Max. Input @ 10% Excess Air	**(kW)**	**1,241**	**1,241**	**1,134**	**1,457**	**1,315**
Max. Air Flow @ 3,450 Pa	(nm^3/hr)	1,305	1,305	1,192	1,532	1,382
Min. Input @ Max. Air Flow	(kW)	20.7	20.7	18.9	23.5	23.8
Max. Excess Air	(%)	6,500	6,500	6,500	6,500	6,000
Air Orifice ΔP	(Pa)	746	746	1,144	1,667	1,468
Gas Inlet Pressure	(Pa)	3,085	3,085	3,359	1,966	2,289
Flame Length @ Max. Input	(mm)	2,130	2,130	1,520	2,440	1,680
Flame Diameter @ Max. Input	(mm)	660	660	460	710	560
BURNER SPECIFICATIONS - LOW FIRE		**BURNER STATIC INLET AIR PRESSURE OF 45 Pa**				
Input @ 10% Excess Air	**(kW)**	**145**	**145**	**132**	**152**	**135**
Air Flow @ 45 Pa	(nm^3/hr)	153	153	139	160	141
Min. Input @ Air Flow	(kW)	6.2	6.2	5.6	6.2	5.7
Max. Excess Air	(%)	2,500	2,500	2,500	2,500	2,500

NOTES:

1. Capacities based on natural gas with LHV of 36.74 MJ/nm^3, 0.59 S.G., and an stoichiometric air:gas ratio of 9.74:1 with burner firing into chamber under no pressure @ 10% excess air. For **CP** model capacities, refer to data as listed under the appropriate HR, HS, MR or MS tile designation.
2. Air and gas flows based on 0°C @ sea level.
3. Static air pressures measured at the burner air inlet pressure tap.
4. Flame lengths measured from the end of the burner tile.
5. All data based on industry standard air and gas piping practices.
6. Flame detection available via UV scanner or flame rod.
7. Burners can be operated above the rated static air inlet pressure; consult Hauck.

In accordance with Hauck's commitment to Total Quality Improvement, Hauck reserves the right to change the specifications of products without prior notice.

HAUCK MANUFACTURING CO., P.O. Box 90 Lebanon, PA 17042-0090 717-272-3051
Fax: 717-273-9882

SVG SUPER VERSATILE GAS BURNER

BURNER MODEL SVG 180 / 280

		TILE DESIGNATION			
		HR	HA	MR	MA
		High Velocity Round	High Velocity Alloy	Medium Velocity Round	Medium Velocity Alloy
BURNER SPECIFICATIONS – HIGH FIRE					
Burner Static Inlet Air Pressure for 180 / 280 (osig)		16	16	16	16
		12	12	8	8
Max. Input @ 10% Excess Air for 180 / 280	**(10^3 Btu/hr)**	**8,515**	**8,515**	**9,000**	**9,624**
Max. Air Flow for 180 / 280	(scfh)	88,225	88,225	93,225	99,720
Min. Input @ Max. Air Flow	(10^3 Btu/hr)	302	125	320	340
Max. Excess Air	(%)	3,000	7,500	3,000	3,000
Air Orifice ΔP for 180 / 280	("wc)	12.6	10.4	14.1	16.1
		2.2	2.2	2.3	2.9
Gas Inlet Pressure for 180 / 280	("wc)	10.5	15.9	11.5	9.6
Flame Length @ Max. Input	(in)	96	78	96	96
Flame Diameter @ Max. Input	(in)	36	30	36	30
BURNER SPECIFICATIONS – LOW FIRE		**BURNER STATIC INLET AIR PRESSURE OF 0.17 OSIG (180) / 0.10 OSIG (280)**			
Input @ 10% Excess Air	**(10^3 Btu/hr)**	**895**	**800**	**895**	**925**
Air Flow for 180 / 280	(scfh)	9,275	8,290	9,275	9,581
Min. Input @ Air Flow	(10^3 Btu/hr)	38	34	38	39
Max. Excess Air	(%)	2,500	2,500	2,500	2,500

NOTES:

1. Capacities based on natural gas with HHV of 1034 Btu/ft^3, 0.59 S.G., and an stoichiometric air:gas ratio of 9.74:1 with burner firing into chamber under no pressure @ 10% excess air. For **CP** model capacities, refer to data as listed under the appropriate HR, HS, MR or MS tile designation.
2. Air and gas flows based on 60°F @ sea level.
3. Static air pressure measured at the burner air inlet pressure tap.
4. Flame lengths measured from the end of the burner tile.
5. All data based on industry standard air and gas piping practices.
6. Flame detection available via UV scanner or flame rod.
7. Burners can be operated above the rated static inlet air pressure; consult Hauck.

In accordance with Hauck's commitment to Total Quality Improvement, Hauck reserves the right to change the specifications of products without prior notice.

SVG SUPER VERSATILE GAS BURNER
BURNER MODEL SVG-E80

	TILE DESIGNATION			
	HR	**HA**	**MR**	**MA**
	High Velocity Round	High Velocity Alloy	Medium Velocity Round	Medium Velocity Alloy
BURNER SPECIFICATIONS – HIGH FIRE				
Burner Static Inlet Air Pressure E80 (Pa)	5,170	5,170	3,450	3,450
Max. Input @ 10% Excess Air (kW)	**2,250**	**2,250**	**2,376**	**2,541**
Max. Air Flow @ 3,450 Pa (nm^3/hr)	2,363	2,363	2,498	2,671
Min. Input @ Max. Air Flow (kW)	80	33	85	90
Max. Excess Air (%)	3,000	7,500	3,000	3,000
Air Orifice ΔP (Pa)	547	547	572	722
Gas Inlet Pressure (Pa)	2,612	3,956	2,861	2,388
Flame Length @ Max. Input (mm)	2,440	1,980	2,440	2,440
Flame Diameter @ Max. Input (mm)	910	760	910	760
BURNER SPECIFICATIONS - LOW FIRE	**BURNER STATIC INLET AIR PRESSURE OF 45 Pa**			
Input @ 10% Excess Air (kW)	**236**	**211**	**236**	**244**
Air Flow @ 45 Pa (nm^3/hr)	248	222	248	257
Min. Input @ Air Flow (kW)	10.0	9.0	10.0	10.3
Max. Excess Air (%)	2,500	2,500	2,500	2,500

NOTES:

1. Capacities based on natural gas with LHV of 36.74 MJ/nm^3, 0.59 S.G., and an stoichiometric air:gas ratio of 9.74:1 with burner firing into chamber under no pressure @ 10% excess air. For **CP** model capacities, refer to data as listed under the appropriate HR, HS, MR or MS tile designation.
2. Air and gas flows based on 0°C @ sea level.
3. Static air pressures measured at the burner air inlet pressure tap.
4. Flame lengths measured from the end of the burner tile.
5. All data based on industry standard air and gas piping practices.
6. Flame detection available via UV scanner or flame rod.
7. Burners can be operated above the rated static air inlet pressure; consult Hauck.

In accordance with Hauck's commitment to Total Quality Improvement, Hauck reserves the right to change the specifications of products without prior notice.

HAUCK MANUFACTURING CO., P.O. Box 90 Lebanon, PA 17042-0090 717-272-3051
Fax: 717-273-9882

SVG SUPER VERSATILE GAS BURNER

TYPICAL MULTIPLE BURNER SYSTEM RATIO CONTROL

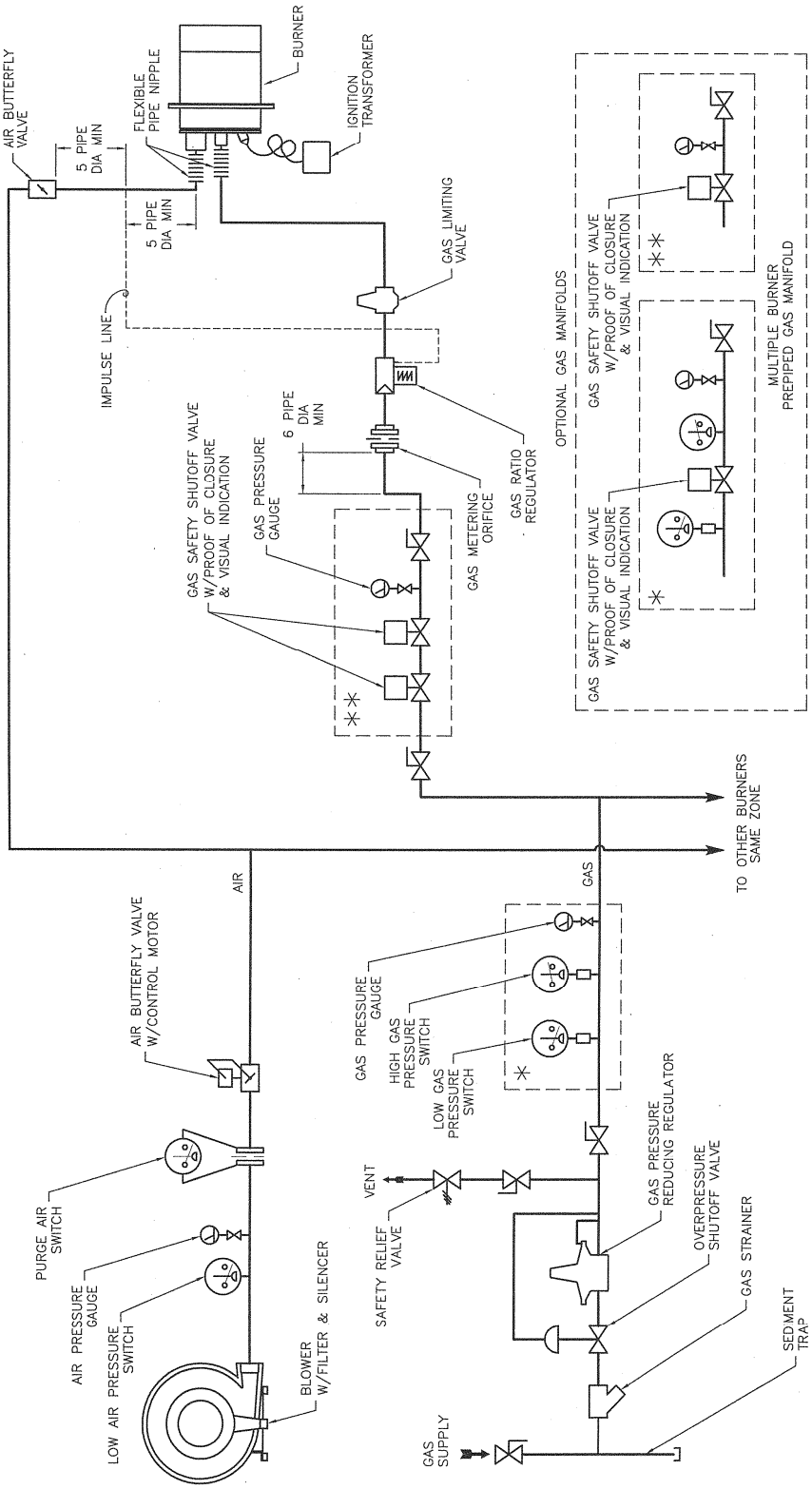

X7643
(NOT TO SCALE)

NOTES:
1. OPTIONAL GAS MANIFOLDS ARE PERMITTED PER NFPA 86 2011 EDITION REQUIREMENTS FOR MULTIPLE BURNERS FIRING INTO A COMMON HEATING CHAMBER, HOWEVER, SPECIAL FEATURES ARE REQUIRED IN THE ASSOCIATED CONTROL SYSTEM (SEE HAUCK APPLICATION SHEET GJ76).

(See Reverses Side for Pulse Fire Control Schematic)

In accordance with Hauck's commitment to Total Quality Improvement, Hauck reserves the right to change the specifications of products without prior notice.

HAUCK MANUFACTURING CO., P.O. Box 90 Lebanon, PA 17042-0090 717-272-3051
www.hauckburner.com Fax: 717-273-9882

SVG SUPER VERSATILE GAS BURNER

TYPICAL MULTIPLE BURNER SYSTEM
PULSE FIRE CONTROL

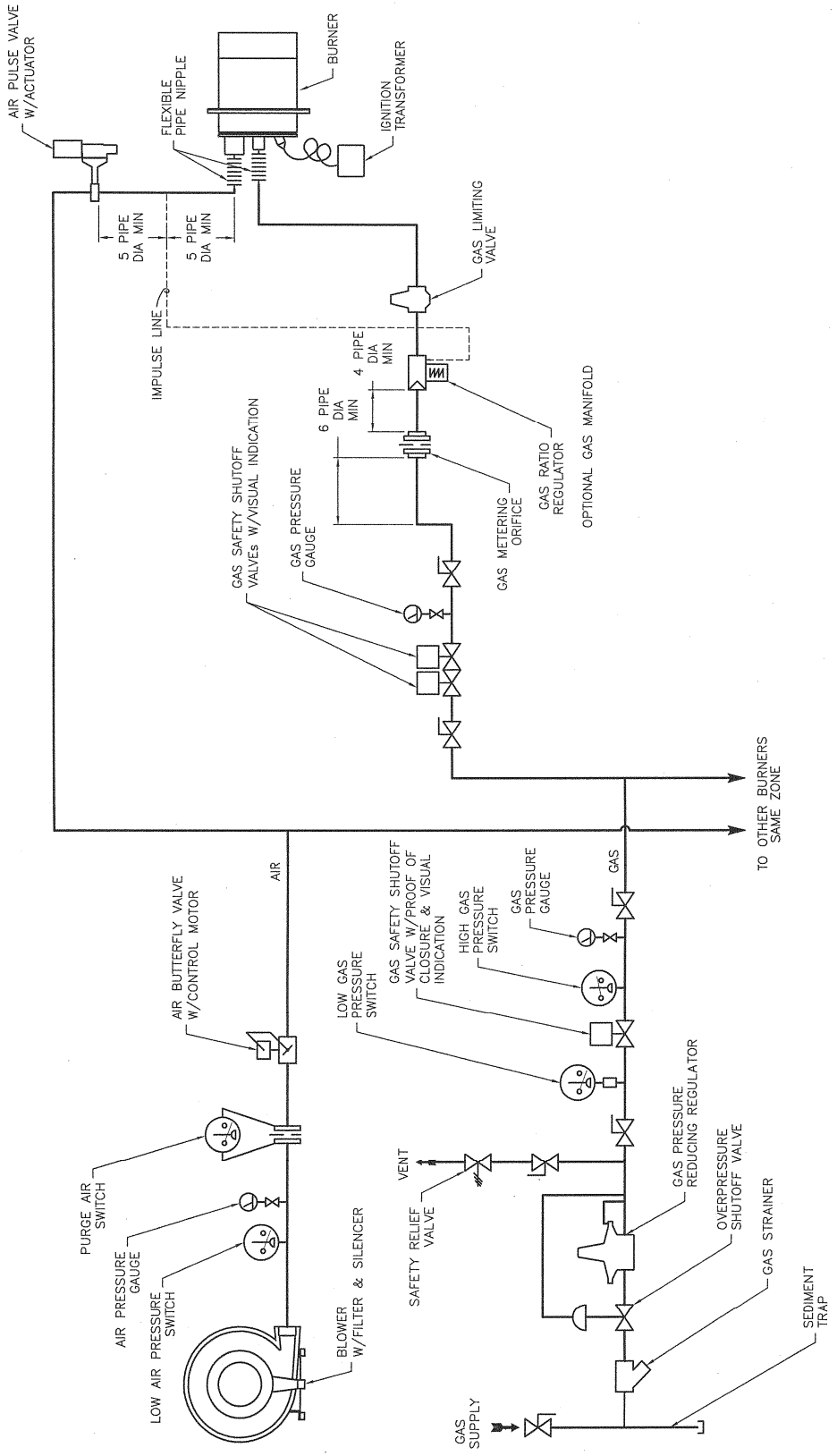

X8683
(NOT TO SCALE)

NOTES:
OPTIONAL GAS MANIFOLDS ARE PERMITTED PER NFPA 86 2011 EDITION REQUIREMENTS FOR MULTIPLE BURNERS FIRING INTO A COMMON HEATING CHAMBER, HOWEVER, SPECIAL FEATURES ARE REQUIRED IN THE ASSOCIATED CONTROL SYSTEM (SEE HAUCK APPLICATION SHEET GJ76).

In accordance with Hauck's commitment to Total Quality Improvement, Hauck reserves the right to change the specifications of products without prior notice.

SVG SUPER VERSATILE GAS BURNER

ORDERING INFORMATION

SVG H 1 25 S C - MS 06

Burner Type

Model
(omit) – Standard (to 500°F)
H - Hi Temp (to 900°F)

Series
1 – 100 Series (16 osig, NPT Threads)
2 – 200 Series (8 osig, NPT Threads)
E – Export (8 osig, RP Threads via Adapters)

Burner Air Inlet Pipe Size
10 – 1" NPT (1 Rp for E Series)
12 – 1-1/4" NPT (1-1/2 Rp for E Series)
15 – 1-1/2" NPT (1-1/2 Rp for E Series)
20 – 2" NPT (2 Rp for E Series)
25 – 2-1/2" NPT (2-1/2 Rp for E Series)
30 – 3" NPT (3 Rp for E Series)
35 – 3" NPT (3 Rp for E Series)
40 – 4 Rpm (4 Rpm w/Comp. for E Series)
60 – 6 Rpm (6 Rpm w/Comp. for E Series)
80 – 8 Rpm (8 Rpm w/Comp. for E Series)

Shape
(omit) – Round
S – Square

Burner Revision
C

Tile Option
HR – High Velocity Round Refractory*
HS – High Velocity Square Refractory*
HT – High Velocity Hauck Tail
HC – High Velocity Ceramic
HA – High Velocity Alloy
MR – Medium Velocity Round Refractory*
MS – Medium Velocity Square Refractory*
MA – Medium Velocity Alloy
CP – Cast in Place

Air Inlet Location
(40-80 only)
06 – 6 O'clock
12 – 12 O'clock

* Refractory tiles come with a customizable tile mounting flange or lug set. Mounting depth must be specified at time of order.

This page left intentionally blank.